Techniques for Digitizing Rotary and Linear Motion

Precision Measurement Division

Dynamics
Research
Corporation

TECHNIQUES FOR DIGITIZING ROTARY AND LINEAR MOTION

FIRST PRINTING, SEPTEMBER 1976

COPYRIGHT ©1976 BY DYNAMICS RESEARCH CORP.

All rights reserved. No part of this book may be reproduced in any form or by any means, electronic or mechanical, including photocopying, recording, or by any information storage and retrieval system without permission in writing from the publisher.

DYNAMICS RESEARCH CORP.
60 CONCORD STREET
WILMINGTON, MA 01887
(617) 658-6100

TABLE OF CONTENTS

Section		Page
1	INTRODUCTION	1-1
2	MONITORING ROTARY AND LINEAR MOTION	2-1
	Types of Transducers	2-1
	Proximity Switches	2-3
	Potentiometers	2-3
	Inductive Components	2-4
	Encoders	2-7
	Relative Advantages of the Transducer Types	2-7
	Open Loop Control	2-11
3	ENCODERS	3-1
	Contact Encoders	3-1
	Non-Contact Encoders	3-3
	Magnetic Encoders	3-3
	Capacitive Encoders	3-5
	Optical Encoders	3-5
	Incremental vs. Absolute Output	3-7
	Encoder Error	3-8
4	THE OPTICAL INCREMENTAL ENCODER	4-1
	Theory of Operation	4-1
	Component Descriptions	4-9
	Light Sensor	4-9
	Light Source	4-11
	Shutter	4-13
	Signal Conditioning Electronics	4-14
	Shaft Bearings	4-14
	Mechanical Assembly	4-18
5	ENCODER INTERFACE CONSIDERATIONS	5-1
	Signal Levels	5-1
	Electrical Interface	5-2
	Signal Distortion	5-2
	Electrical Noise	5-5
	Rotary Versus Linear Encoder Applications	5-6
	Mechanical Interface	5-7
	Encoder Life	5-10
	Error	5-13

TABLE OF CONTENTS (Cont.)

Section		Page
6	APPLICATION NOTES	6-1
	Photogrammetry	6-1
	The Optical Comparator	6-2
	Inserting Components in Printed Circuit Boards	6-4
	Fabric Cutting	6-6
	X-Ray Analysis of Tumors	6-8
	Phaselock Speed Control of Electric Motors	6-10
	Moving Head Disc Drive	6-12
	Phototypesetting	6-14
	Wire Positioning for Ultrasonic Weld	6-16
	Synchronization of Spindle and Tool Movement on Numerically Controlled Lathes	6-17
	Numerically Controlled Back Gauge	6-19
7	REFERENCE	7-1
	SI Units and Symbols	7-1
8	GLOSSARY	8-1

LIST OF ILLUSTRATIONS

Figure		Page
2-1	Potentiometers	2-3
2-2	Direct Mechanical Readout with the Synchro	2-4
2-3	Four Pole Resolver	2-5
2-4	Induction Potentiometer	2-5
2-5	Variable Reluctance Device	2-5
2-6	Differential Transformer	2-6
2-7	Linear Inductosyn Scale	2-6
2-8	Inductosyn Operation	2-7
2-9	Measurement and Display of Rotary Displacement Using the Encoder	2-8
2-10	Measurement and Display of Rotary Displacement Using the Resolver	2-8
2-11	Measurement and Display of Rotary Displacement Using the Potentiometer	2-9
2-12	Relative Cost and Resolution of Typical Transducers	2-9
2-13	Use of Encoder to Close an Open Loop System	2-12
3-1	Absolute Contact Encoder Disk	3-2
3-2	Typical Magnetic Encoding	3-4
3-3	Encoder Disks	3-6
3-4	Encoder Resolution	3-8
4-1	Light Shutter	4-2
4-2	Detector Output	4-3
4-3	Effect of Signal Drift on Spacing of Encoder Pulses	4-4
4-4	Two Cell Arrangement for Signal Drift Compensation	4-5
4-5	Outputs of Two Sensors Fixed 180° Out of Phase	4-6
4-6	Output of Sensors No. 1 and No. 2 Connected in Opposition	4-6
4-7	Dual Channel Output Phased in Quadrature	4-7
4-8	Result of an Unbalanced Pair of Solar Cells	4-8
4-9	Typical Frequency Response of a Pair of Unbalanced Cells	4-10
4-10	Solar Cell Construction	4-11
4-11	Spectral Response of Silicon Cell and Spectral Distribution of Tungsten Lamp	4-12
4-12	Linear Ruling Engine	4-13
4-13	Encoder Output Signals	4-18
4-14	Major Rotary Encoder Components	4-19
4-15	Rotary Encoder	4-19
4-16	Disk Alignment	4-20
4-17	Photomicrograph (110X) of Lines and Spaces as Observed During Disk Alignment Procedure	4-20
4-18	DRC Rotary Encoders	4-21

LIST OF ILLUSTRATIONS (Cont.)

Figure		Page
5-1	Silicon Cell Output	5-3
5-2	Shaped Output	5-3
5-3	Pulse Output	5-3
5-4	High Level Output	5-3
5-5	Signal Distortion	5-4
5-6	Reshaping with the Differential Line Receiver	5-5
5-7	Recommended Cable Shield Grounding	5-6
5-8	Relative Cost of Linear Encoder vs. Rotary with Rack and Pinion	5-7
5-9	Typical Flexible Coupling	5-8
5-10	Rack and Pinion Spar Assembly	5-9
5-11	Gear to Gear Assembly	5-9
5-12	Precision Belt Drive	5-10
5-13	DRC Linear Encoders	5-11
5-14	Scale and Encoder Mounting Requirements	5-12
5-15	Scale Bending Error	5-14
6-1	Optical Comparator with Digital Readout	6-3
6-2	Workpiece for Comparator Inspection	6-3
6-3	X-Y Table for Component Insertion	6-5
6-4	Fabric Cutting Blade Alignment	6-6
6-5	Components of System for Computer Aided X-Ray Analysis of Tumors	6-9
6-6	Typical Organization of Data on Magnetic Tape	6-11
6-7	Typical Phaselock Servo	6-11
6-8	Application of Encoder to Determine Read/Write Head Position	6-13
6-9	Encoder Output Waveform — Single Channel	6-13
6-10	Phototypesetter	6-15
6-11	Phototypesetting Character Disc	6-15
6-12	Part Positioning for Ultrasonic Welding	6-16
6-13	Cutting Threads with the NC Lathe	6-17
6-14	Synchronization of Tool and Spindle Drives	6-18
6-15	Typical Shape Formed with the Press Brake	6-19
6-16	Front View of Press Brake Punch and Die	6-20
6-17	Position of Workpiece in Press Brake	6-20
6-18	DRC Numerically Controlled Back Gauge	6-21

LIST OF TABLES

Table		Page
2-1	Design Considerations	2-2
4-1	Light Sources	4-12
5-1	Required Signal Conditioning vs. Cable Length	5-4
5-2	Potential Sources of Error	5-14
7-1A	SI Units	7-1
7-1B	Multiple and Submultiple Units	7-2
7-2	Definition of Basic SI Units	7-3
7-3	Definitions of Derived Units of the International System Having Special Names	7-3
7-4	Conversion Factors for Physical Quantities	7-5
7-5	Conversion Factors for Servo Calculations	7-9
7-6	Angular Resolution Table	7-12
7-7	Angles to Decimals	7-12
7-8	Inch-Millimeter Equivalents of Decimal and Common Fractions from 1/64 to 1 in.	7-13

1. INTRODUCTION

Five years ago, the sophisticated motion transducers like resolvers, synchros, and encoders were largely confined to servo applications and some aerospace hardware. Encoder applications were limited because encoders are digital devices and most applications in this period required analog signals. As a result, relatively few design engineers were experienced encoder users.

Today that situation is rapidly changing. The combination of powerful, low cost digital processors and fast, accurate motion transducers is replacing more expensive, less effective designs as well as performing totally new functions. Because the spectrum of applications is so broad, the use of encoders can no longer be relegated to a few design specialists. Every engineer designing digital measurement and control systems must have an adequate understanding of the strengths and weaknesses of the available transducers.

This handbook has three broad objectives:

1. *To provide a framework for identifying the proper motion transducer to use in a given application.*
2. *To provide a basic understanding of encoder operation.*
3. *To guide the user through the major steps of interfacing an encoder with his system.*

Sections 2, 3, and 4 address the first two objectives. The major types of motion transducers and their relative advantages are described in Section 2. In Section 3 the major types of encoders are described. Operation of Dynamics Research Corporation's optical incremental encoder is discussed in Section 4.

Encoder interfacing considerations are discussed in Section 5 as well as the determinants of encoder life and total system error.

The encoder applications described in Section 6 were selected to illustrate the principles discussed in the preceding sections. They also indicate the broad utilization of encoders in manufacturing applications as well as by original equipment manufacturers.

2. MONITORING ROTARY AND LINEAR MOTION

Measurement and control often involve monitoring rotary and linear motion. Measurement and control are multi-stage processes with the first stage of either process the same, generation of an electrical signal to represent the motion. When measurement is the objective, this signal is used to quantify the desired property (i.e. displacement, velocity, etc.), and the data are translated to a format that can be understood by the end user. When control is the objective, the signal is used directly by the associated controller.

Whether measurement or control is required, generation of the electrical signal to represent motion is accomplished with transducers. Transducer design strongly depends on the method of processing the output signal. Recent advances in solid state technology have produced low cost digital microprocessors. As a result, the rate at which information from the transducer can be processed, as well as the flexibility of what can be done with these data, has increased. There is a growing demand for more sophisticated transducers that

- *are easily interfaced with digital systems, and*
- *more rapidly and accurately track the monitored motion.*

TYPES OF TRANSDUCERS

The major types of transducers used to monitor motion are:

- Proximity Switches
- Potentiometers
- Inductive Components, and
- Encoders

The transducer that should be used in a given application depends on the performance requirements, environmental constraints, and other factors such as cost, space requirements, etc. Some of the more important design considerations are listed in Table 2-1 on page 2-2. The following is a description of each transducer type with their relative strengths and weaknesses.

Table 2-1. Design Considerations

I. APPLICATION

- A. Measurement or Control or Both
- B. Analog or Digital Output Required
- C. Response Characteristics
- D. Type of Measurement
  1. Displacement
  2. Velocity
  3. Acceleration
  4. Force, Pressure, or Other Secondary
- E. Interfacing Requirements

II. PERFORMANCE

- A. Life
- B. Reliability
- C. Accuracy
- D. Resolution
- E. Speed

III. ENVIRONMENTAL CONSTRAINTS

- A. Electrical Noise
- B. Power Failure
- C. Temperature
- D. Humidity
- E. Foreign Matter (Grease, Dirt, Water, Etc.)
- F. Mechanical Shock & Vibration
- G. Magnetic Fields
- H. Nuclear Radiation

IV. OTHER

- A. Cost
- B. Installation or Assembly Requirements
- C. Maintainability
- D. Size
- E. Weight

Proximity Switches

Proximity switches are probably the oldest of the control elements and are basically location sensing devices. They include true mechanical switches, photo sensors, and magnetic pick-ups.

Proximity switches have historically been the primary location indicating device in control systems but are rarely used for measurement except in "go-no go" gauging. Output is a discrete change in signal level, and these devices are easily interfaced with both custom controllers and computers. Response of mechanical switches is relatively slow. Precautions must be taken to ignore the multiple signals generated by contact bounce when these switches are monitored with control devices such as computers that are capable of rapid response.

Potentiometers

Potentiometer output depends on the position of a sliding brush on a resistive element as illustrated in Figure 2-1. Normally operated as a voltage divider, output is analog, and analog-to-digital hardware is required if digital output is desired. Potentiometers are often used to measure displacement as opposed to the proximity switch whose chief function is control. Potentiometers are moderately accurate devices when properly calibrated, and those which employ the film type resistive element provide good resolution. The chief disadvantage is wear which degrades accuracy. Potentiometers are susceptible to all environmental constraints. Essentially mechanical contact devices, they must be protected from shock and vibration as well as contamination by foreign matter.

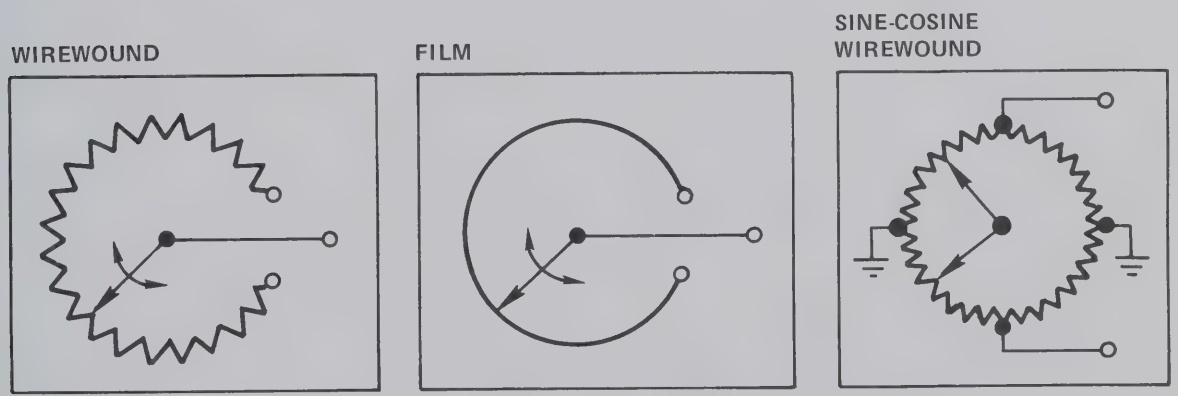

Figure 2-1. Potentiometers

Inductive Components

The inductive transducer works on the same principle as the transformer: alternating current in one coil (primary) induces alternating current in an adjacent coil (secondary). The coils are usually mechanically separate. The induced secondary voltage vector varies with the physical position of the secondary winding relative to the primary. This position can be deduced accurately with remotely located external electronic circuits.

There are many variations of the inductive transducer. The most common are synchros, resolvers, induction potentiometers, differential transformers, variable reluctance devices, and the Inductosyn.

A true synchro resembles a 3-phase motor, but produces an electrical output corresponding to the angular position of its shaft. The output is analog, and readout can be provided by interpretation of relative voltage amplitude, or phase. Synchros are also commonly used to remotely sense angular shaft position as illustrated in Figure 2-2. The synchros are connected so that the output shaft assumes the same relative position as the input shaft.

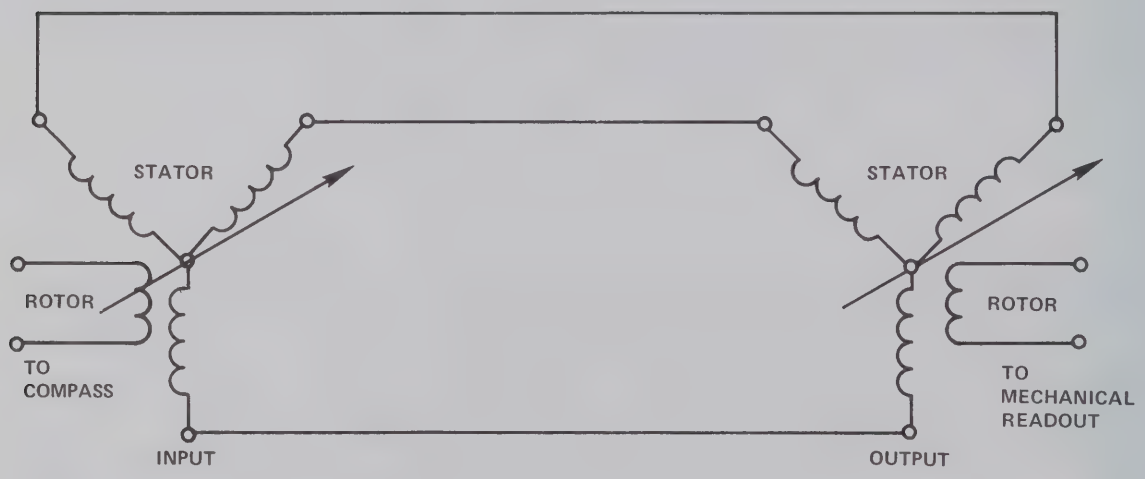

Figure 2-2. Direct Mechanical Readout with the Synchro

Resolvers are similar to synchros except they have two stator coils at right angles rather than three separated by 120°. The most simple resolver, the 4-pole, is illustrated in Figure 2-3. The outputs V_1 and V_2 depend on the angles between the rotor and the stator coils. Higher resolution resolvers are produced by using additional sets of coils. Sixteen pole resolvers are fairly common.

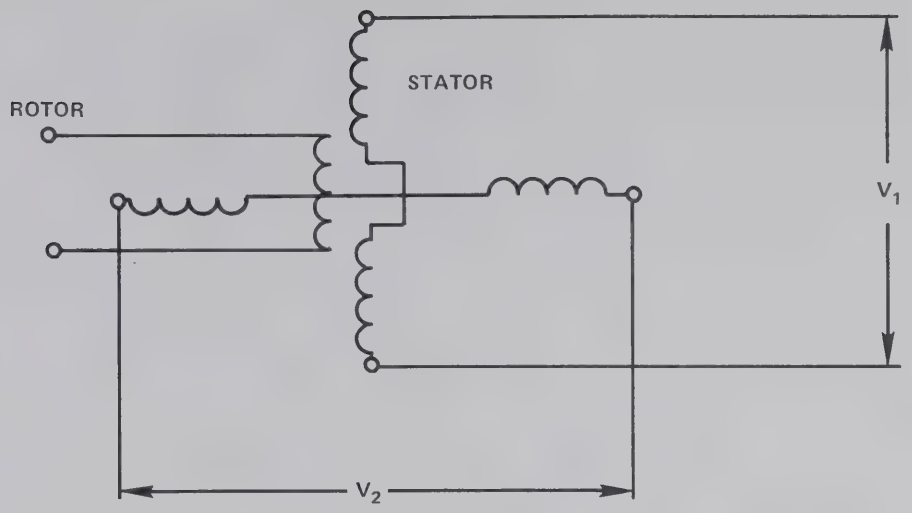

Figure 2-3. Four Pole Resolver

Induction potentiometers (Figure 2-4) are single-phase resolvers with a voltage output that varies linearly with shaft position for about 45° on either side of null. In related applications involving smaller angular displacements, the Microsyn, a variable reluctance device, is sometimes employed. (See Figure 2-5.)

Figure 2-4. Induction Potentiometer

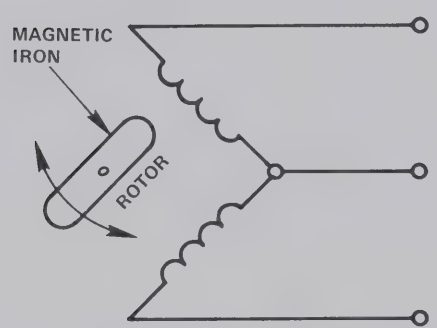

Figure 2-5. Variable Reluctance Device

Rotary differential transformers (Figure 2-6) normally have a wound stator with three coils and a rotating magnetic-iron core. One of the stator coils (the primary) is energized with ac. The iron rotor provides inductive coupling with the two secondary stator windings and output depends on rotor position. If the rotor is centered, output is approximately zero. Output increases with the rotor movement, with phase depending on direction of rotation. Linear differential transformers which operate on similar principles are also used.

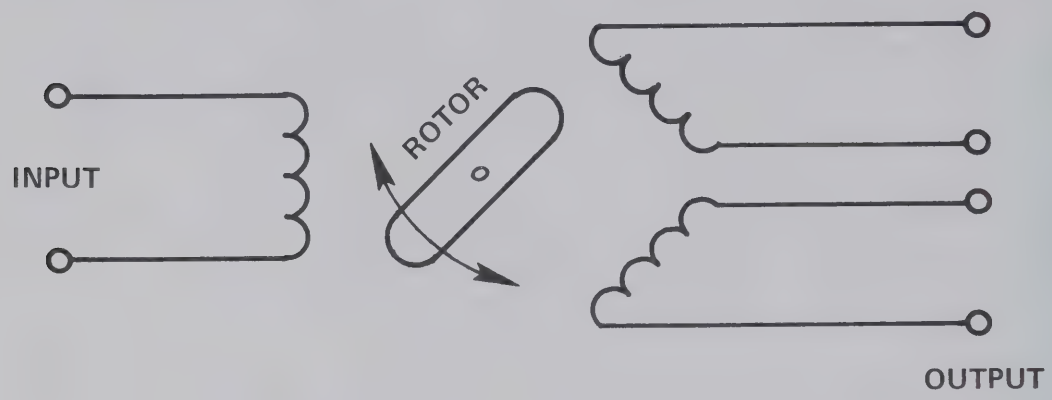

Figure 2-6. Differential Transformer

The Inductosyn is a widely used transducer for both rotary and linear applications. The principle of operation is electromagnetic coupling between parallel conductors. The conductors are produced as printed circuits as illustrated in Figure 2-7. Output is sinusoidal and depends on relative motion between two sets of conductors one of which is electrically excited. Coupling is maximum (output is at +1 of the waveform) at the position shown in Figure 2-8. After a displacement of one half the conductor separation, coupling is a minimum, and output is the zero of the output waveform. Displacement to a full step again maximizes coupling, but output is maximum in the opposite direction (i.e. −1 of the waveform).

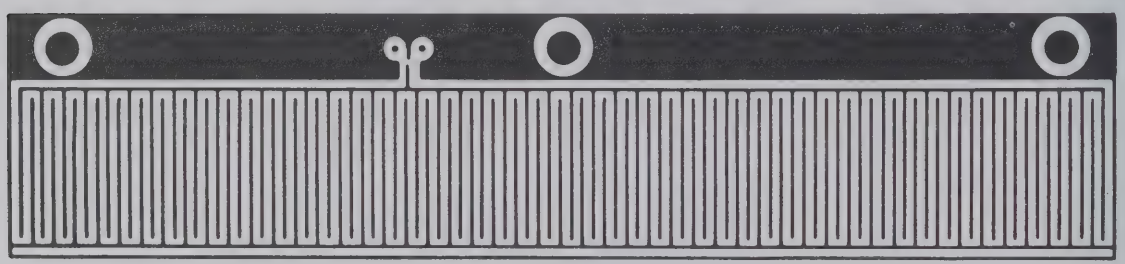

Figure 2-7. Linear Inductosyn Scale

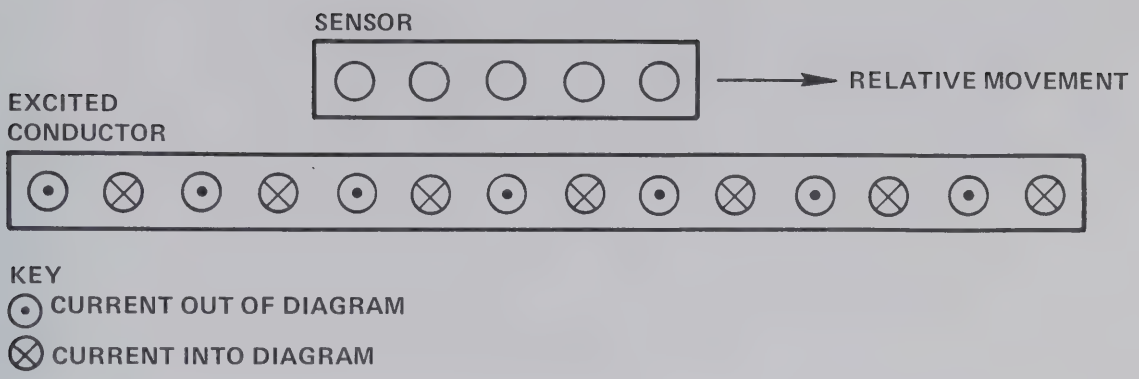

Figure 2-8. Inductosyn Operation

Encoders

Encoders are of two basic types: contacting and non-contacting. Non-contacting encoders depend on magnetic, capacitive, or optical phenomena. Encoder output can be either absolute or incremental. Absolute encoder output is a digital code representing the absolute position of the shaft (rotary) or moving head (linear). Incremental encoder output is a series of pulses which must be counted by external logic to determine absolute position relative to a starting point.

The encoding disks generally rotate with the shaft being monitored, and are patterned with discrete areas of various sorts that can be detected. The encoding sensors and circuits are usually within the same housing.

RELATIVE ADVANTAGES OF THE TRANSDUCER TYPES

Potentiometers, encoders, and inductive transducers are used for both measurement and control. Because of the wide variety of these devices, there is considerable overlap in their application. The proximity switch is technically a measurement and control device but because of its limited two-state output, it is not normally competitive with the other devices. Likewise, certain of the inductive devices are limited to special applications (e.g. the Microsyn, to measurement of small angular displacement).

For comparison, Figures 2-9 through 2-11 illustrate the components required to measure rotary displacement with the encoder, resolver, and potentiometer. The gear train is normally required in resolver applications to achieve the desired resolution. A/D conversion is required for both the resolver and potentiometer applications. However, resolver A/D is considerably more complex than that for the potentiometer because of the switching logic required to follow the resolver's multipole output.

Figure 2-12 shows the approximate resolution that can be achieved with each competing transducer. Mechanical encoders, synchros, precision potentiometers, and the

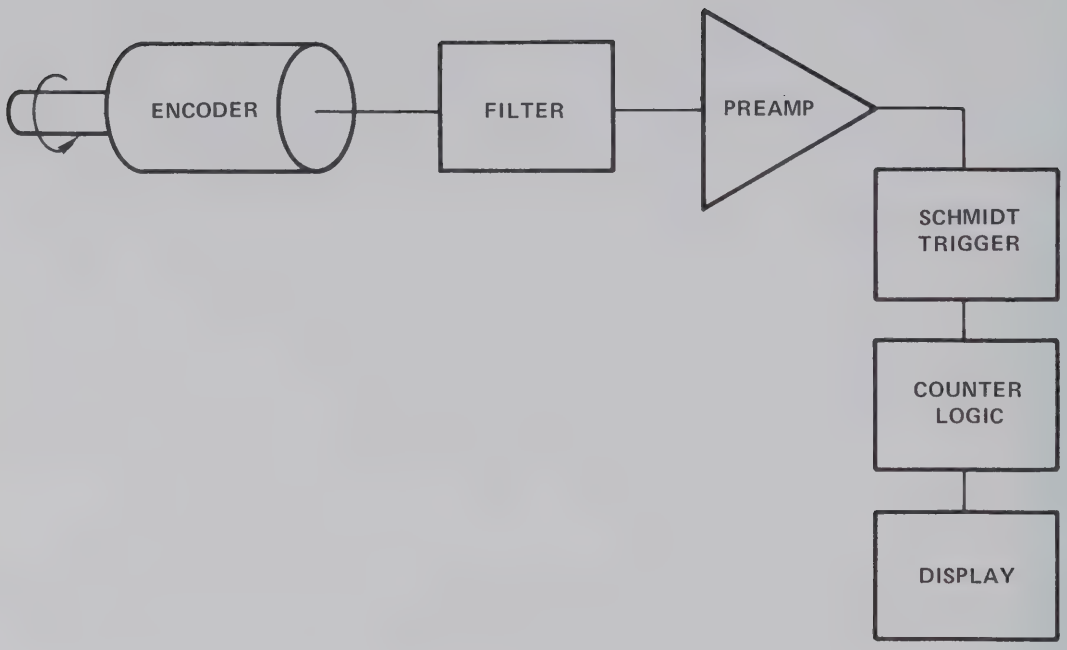

Figure 2-9. Measurement and Display of Rotary Displacement Using the Encoder

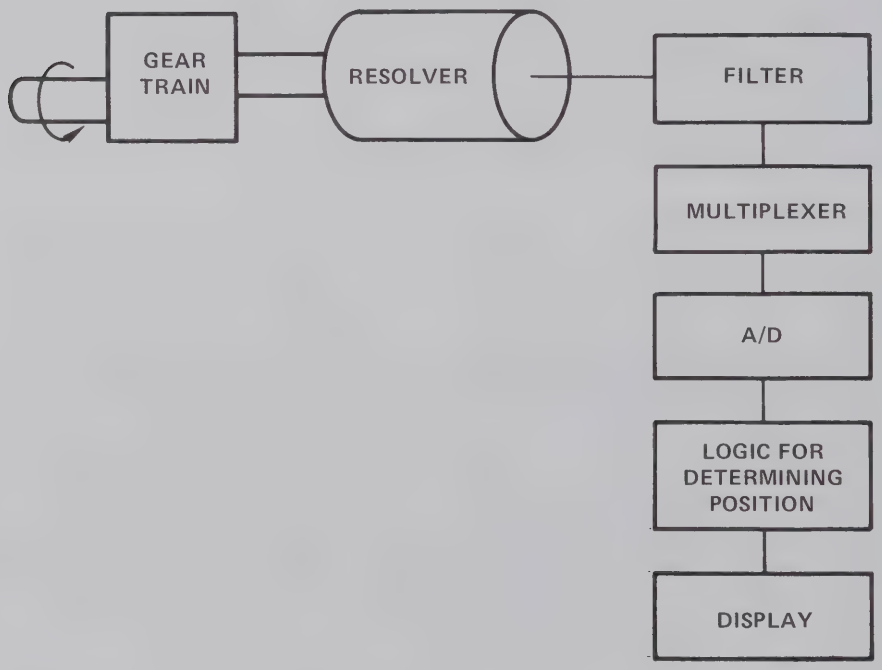

Figure 2-10. Measurement and Display of Rotary Displacement Using the Resolver

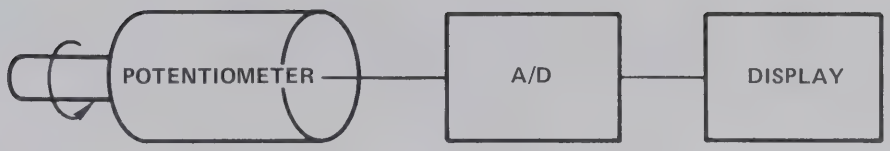

Figure 2-11. Measurement and Display of Rotary Displacement Using the Potentiometer

simple 4-pole resolvers are confined to the region below about one part in 2^{10} or 2^{11}. By using additional coils the range of resolvers can be extended to about 2^{16}.

The Inductosyn, a device too expensive to use below about 2^{14}, can provide maximum resolution of about one part in 2^{22}, and is the only alternative to the encoder above 2^{16}. The optical encoder is employed over the entire spectrum of Figure 2-12 ($2^6 - 2^{22}$). However, any transducer designed for use above 2^{18} is difficult to operate and very expensive.

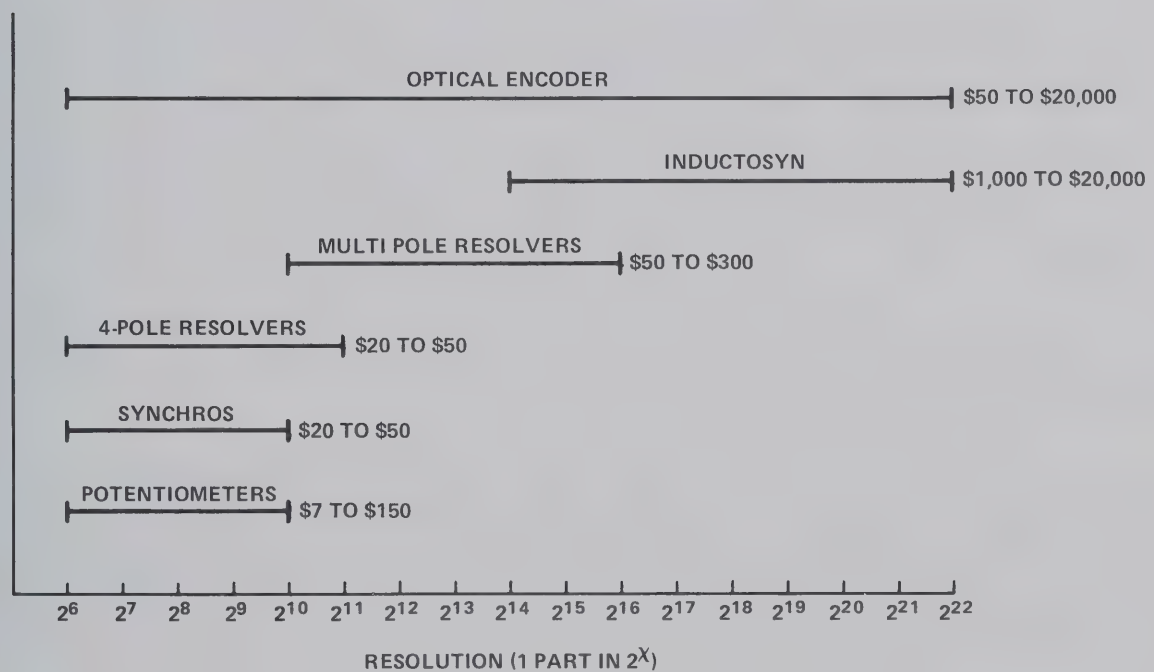

Figure 2-12. Relative Cost and Resolution of Typical Transducers

Transducer cost depends on many factors such as resolution, reliability, and the environment in which the particular design must function. Figure 2-12 illustrates the relative costs of the transducers in general use. Precision potentiometers are normally the cheapest but are severely limited by wear.

Although cost of the inductive transducer is normally less than the optical encoder of equal resolution, total system costs are roughly the same. This is because the inductive transducer typically requires a precision gear train ($50 to $100), A/D conversion ($100 to $500), and other interface hardware not used in the equivalent optical system.

Speed (i.e. shaft input) is important in many applications. Speed is severely limited at the higher resolutions where only the encoder and Inductosyn are competitive. Encoder speed is limited by frequency response of the electronics. Because the Inductosyn achieves high resolution by digitization of an analog waveform, a relatively slow operation, the encoder can generally be operated at higher speeds than the Inductosyn. For example, at a resolution of one part is 2^{20} the rotary Inductosyn is limited to about 1 rpm while the equivalent optical incremental encoder can be operated up to about 30 rpm.

Circuit noise is a problem for each transducer, but in different ways. Incremental encoders suffer from voltage spikes that can be caused by poor grounding or improper shielding. The result is an irretrievable count loss. Synchro datalines are vulnerable to 60 Hz noise pickup and transients from large three phase machines. Absolute encoders are less vulnerable to circuit noise and power failure because the true position is always recoverable.

To attain resolutions equivalent to the encoder, inductive transducers normally require a gear train to step up the speed of the transducer shaft. Such gear trains must be manufactured to precise dimensions and typically cost $50 to $75.

Operation of both inductive transducers and encoders is impaired by dirt, grease, water, etc. Adequately protected instruments are available from most manufacturers for use where exposure is a problem. Mechanical shock and vibration can be a problem for either transducer.

The operating life of inductive transducers and the non-contacting encoder is essentially that of the rotating shaft bearings. Contact encoders suffer from relatively shorter lives because of the required sliding contact.

Installation and assembly requirements can be more stringent for encoders than for inductive devices. Alignment is especially critical for linear devices. Some designs can tolerate greater misalignment than others. This is especially true of optical encoder designs based on the light shutter described in Section 4 as opposed to those designs based on the more general Moire fringe effect. This feature should be carefully investigated if ease of installation is of particular concern.

Rotary devices are normally preassembled and the major installation problem is protecting against excessive radial loads on the shaft that can shorten bearing life. Inductive transducers, particularly resolvers, are generally used in extremely rugged environments

where accuracy is not of first importance. In some applications involving a large number of transducers, the cost per transducer can be considerably reduced by multiplexing all devices to a single analog-to-digital converter. Encoders are generally chosen for applications in which accuracy and stability are more important than ruggedness.

OPEN LOOP CONTROL

Thus far the type of control described has been closed loop. Closed loop control requires a transducer to produce the electrical signal by which the motion is monitored. So called open loop control is achieved without these transducers by using discrete devices such as step motors. Step motor operation depends on the electromagnetic interaction between a series of radially directed teeth on the stator and rotor. The teeth have separate windings and can be independently energized. When a current is passed through the proper windings, a torque is developed in such a way that the rotor turns to a position of minimum magnetic path reluctance. When a different set of windings is energized, the minimum reluctance point is at a different set of teeth causing the rotor to move to a new position. By properly sequencing the energization, the rotor can be made to step in any way desired. The electronics which performs this sequencing is called the driver. The driver is expensive, costing $700 to $800 for a $300 step motor.

The step motors advantage is that once this driver is designed the motor can be depended upon to step as commanded and no feedback is required for confirmation so long as the operating characteristics such as load and step sequence are unchanged. The disadvantage is that the driver must be modified to accommodate any changes in the operating characteristics of the system, an expensive procedure. In those applications where discrete motion that could be provided by a step motor is required but restrictions on loads and step sequence cannot be met, the open loop system can be closed with an encoder that provides a position feedback signal. This allows the motor to be operated at its full capability regardless of the load variations. Figure 2-13 illustrates such an application.

Probably the most serious disadvantage of the step motor is its low basic resolution (about one part in 2^8) relative to the devices shown in Figure 2-12.

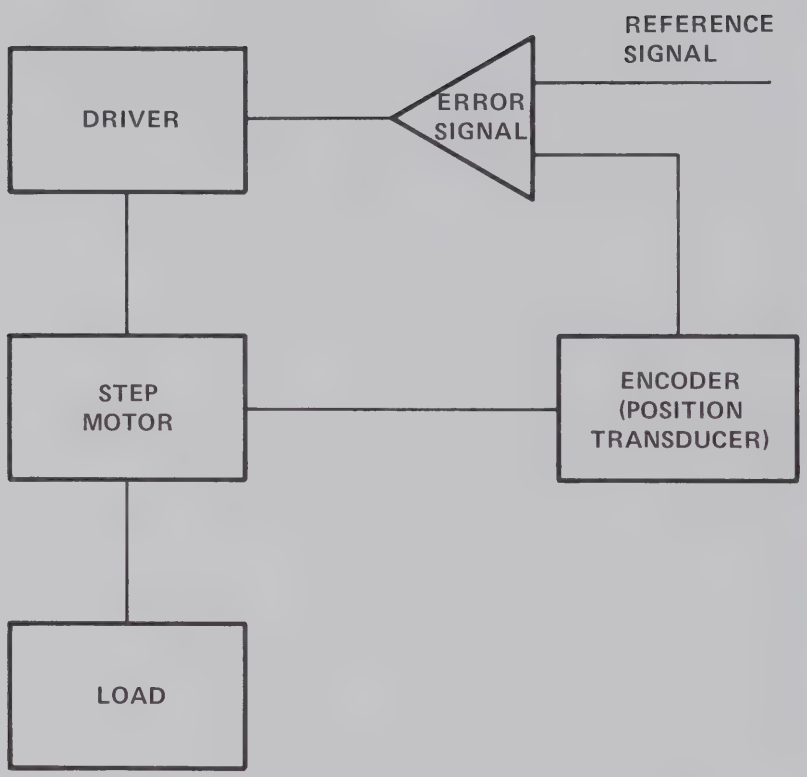

Figure 2-13. Use of Encoder to Close an Open Loop System

3. ENCODERS

Encoders are mechanical to electrical transducers whose output is derived by "reading" a coded pattern on a rotating disk or a moving scale. Encoders are classified by the

- *method used to read the coded element: contact or non-contact*
- *type of output: absolute digital word or series of incremental pulses, and*
- *physical phenomenon employed to produce the output: electrical conduction, magnetic, optical, capacitive.*

This discussion will be confined to the rotary encoder. However, the principles apply to linear encoders as well.

CONTACT ENCODERS

Contact encoders are those which employ mechanical contact between a brush or pin sensor and the coded disk. The disk contains a series of concentric rings or tracks which are thin metallic strips joined at their base as shown in Figure 3-1. The four tracks shown in Figure 3-1 represent a binary code consisting of 2^0, 2^1, 2^2, 2^3. The associated contact sensors are identified at B_0, B_1, B_2, and B_3, and encode the numerals 0 through 15. Disks in presently available contacting encoders may contain up to 30 tracks, one of which is a solid, unsegmented, concentric ring (not shown in Figure 3-1) that functions as an electrical return path. As the disk rotates, the sensors alternately contact conductive strips and adjacent insulators, producing a series of square wave patterns.

Any pattern that can be produced photographically can be reproduced on an encoder disk and may include uniform or non-uniform tracks, tracks that are out of phase with respect to one another, and other unusual configurations used for special control applications. However, the most common use of encoders is measurement of shaft position where any non-uniformity is a source of error.

Two common encoder disk problems are non-uniform segment spacing and track eccentricity. Non-uniform segment spacing produces positional error. Eccentricity causes an error that is a sinusoidal function of shaft angle.

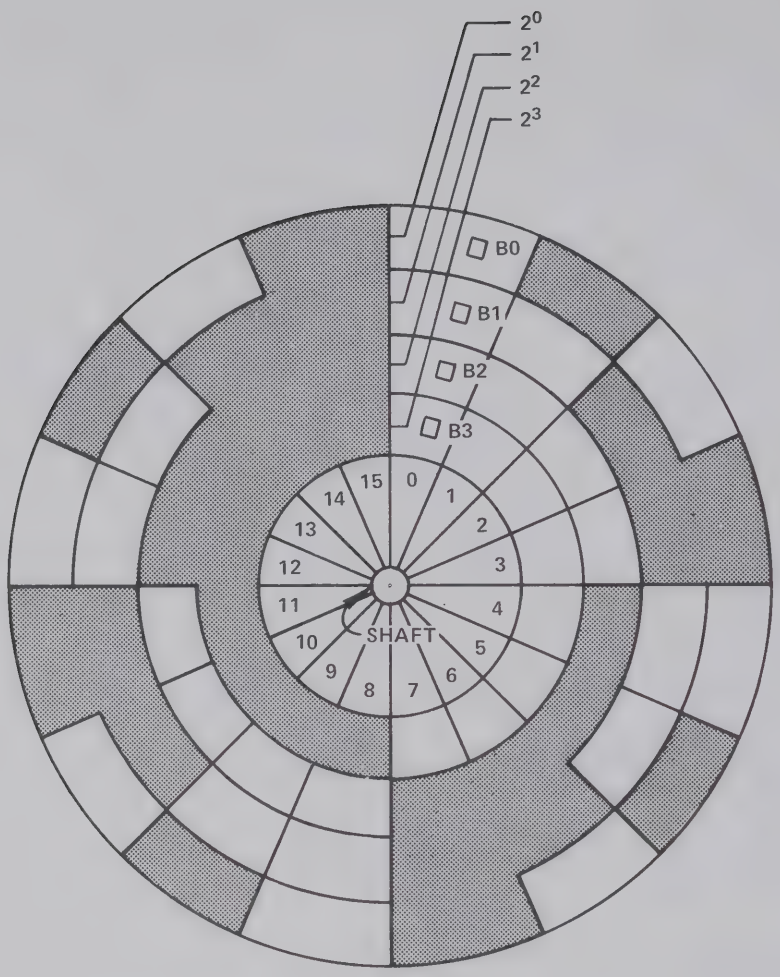

Figure 3-1. Absolute Contact Encoder Disk

In addition to segment placement and eccentricity, the potential performance of contact encoders is limited by the minimum practicable segment and sensor size. The smaller the disk segments, the smaller are the incremental differences in shaft input position that can be detected. It is feasible to manufacture disks with segments and sensors less than 0.001 inch minimum dimension. However, the life of the resulting encoder would be severely limited by contact wear and bridging of the disk segments. Generally, the finest usable segment width is 0.005 to 0.010 inch, and overall resolution is about 2 to 15 seconds of arc.

In addition to these preceding problems, contact encoders are limited to relatively low input shaft speeds. Actual limits depend on encoder size, the mechanical interface, expected wear, etc. In general, 1 to 2 inch diameter encoders are limited to speeds of approximately 200 rpm.

Even though contact encoders have been used many years, occasional improvements are still made. In a recent development pin contact sensors replaced the conventional

cantilevered brush assembly. The pin contact sensor is three spring-loaded pins operated in parallel. This arrangement significantly improves encoder life and reliability. Pin contact encoders have been operated effectively at shock loads up to 150 G's and vibrations of 30 G's at 5 to 2000 cps and cost up to $300.

NON-CONTACT ENCODERS

Non-contact encoders are those which employ physical phenomena other than electrical conduction to read the coded disk. The most common types are magnetic, capacitive, and optical.

Magnetic Encoders

Magnetic encoders were developed to replace contact encoders in applications limited by rotational speed. However, magnetic encoders are not significantly more accurate than contact encoders. Magnetic encoders operate by detecting resonant frequency change, a magnetization change, or magnetic saturation in an inductor. With all methods, flux induction by the magnetically coded disk affects the change by aiding or inhibiting an existing state. Thus for each principle, two normal states exist corresponding to a logical one or zero.

The resonant frequency method utilizes a tuned circuit, the normal frequency of which represents one logical state, and the detuning of the circuit representing the opposite logical state.

In the magnetic saturation method (principle of a saturable reactor), the inductor is either magnetically saturated or is nonsaturated. Alternately, the reluctance of the magnetic circuit is effectively translated to logical ones and zeros.

The inherent accuracy and resolution of a magnetic encoder is no greater than that of contact types. Resolution is limited by the size of the magnetized spot and complicated by interaction between the magnetized spots on adjacent tracks. Magnetic encoders overcome the basic speed limitation of contact encoders and offer somewhat greater longevity by eliminating physical contact between disk and sensor. Also, magnetic encoders have greater resistance to most natural environmental extremes and all of the standard scanning techniques can be employed. However, high ambient fluxes or radiation densities can destroy the disk pattern or inhibit saturated core operation. Therefore, greater precaution against mutual electromagnetic interference is required when magnetic encoders are included in a system. Figure 3-2 illustrates the principle stages of typical magnetic encoding.

This requirement for additional shielding to ensure that surrounding equipment does not interfere with encoder operation and, conversely, that the magnetic encoder does not disturb the operation of adjacent gear, adds to the cost of an already expensive approach. Generally, magnetic encoders are specified in applications requiring moderate accuracy and resolution and high rotational speed and cost $400 to $500.

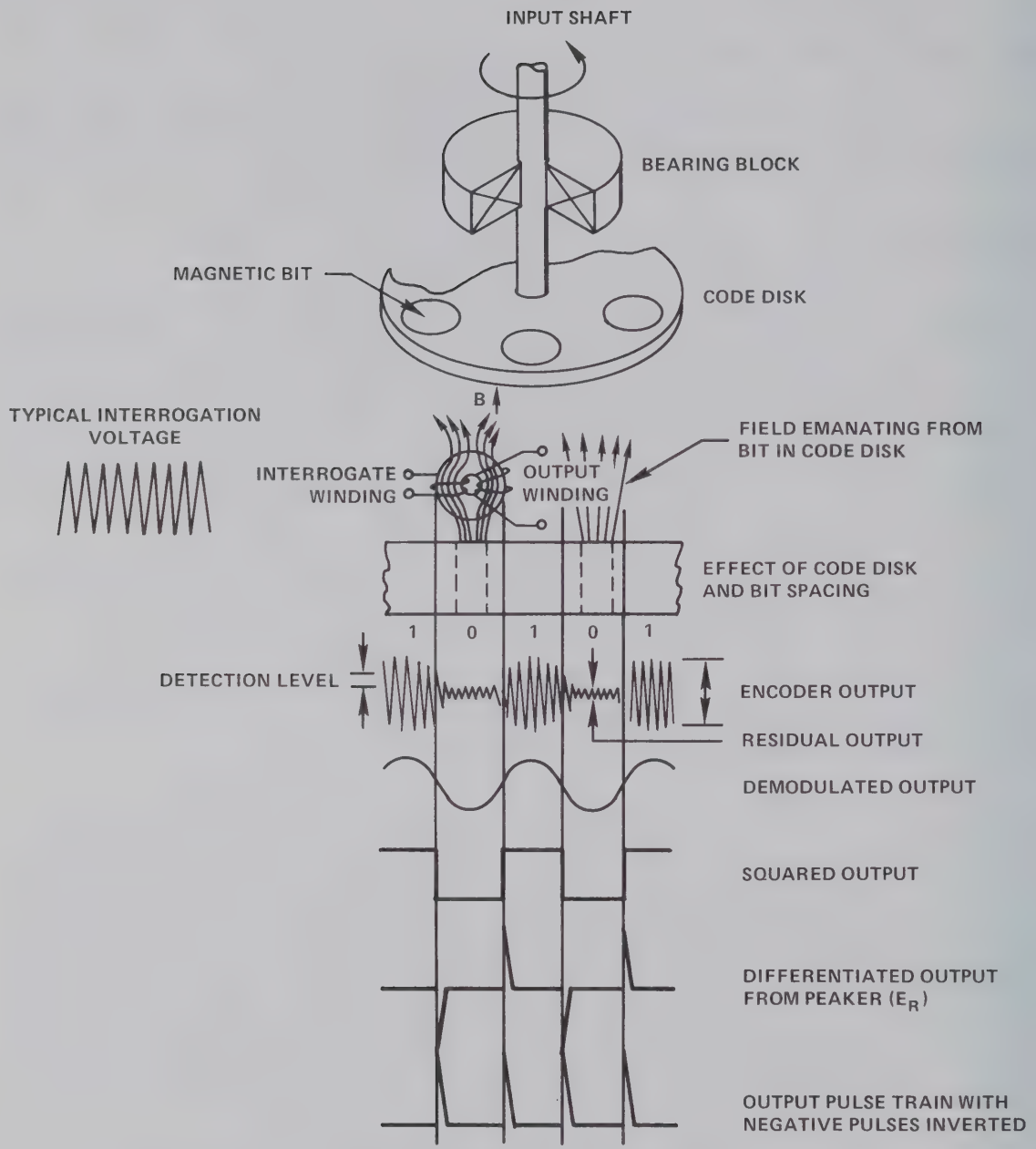

Figure 3-2. Typical Magnetic Encoding

Capacitive Encoders

Capacitive encoders are the least used of the non-contacting types and have been developed in response to unique needs. Readout is effected electrostatically using a phase shift measuring system or a frequency control technique to develop the digital output.

Although capacitive devices are not generally available as standard hardware, up to 19-bit, single turn units have been produced. Theoretically, the capacitive technique can be used to accomplish any of the encoding tasks performed by the contact, optical, or magnetic types. However, practical problems of design, manufacture, and operation have limited the use of capacitive detection, and relatively few of these units are used.

Optical Encoders

The optical encoder was the earliest of the non-contact devices developed to eliminate the wear problems inherent with contact encoders. Present day optical encoders provide the highest accuracy encoding and can be operated efficiently at high speeds.

Optical encoder disks have opaque and transparent segments (see Figure 3-3). The disks are normally produced by exposing a photographic emulsion to light, or where greater durability is required, by plating a metal on the substrate. The substrate, usually glass, provides mechanical integrity and dimensional stability. Readout is effected by an array of carefully aligned photoelectric sensors positioned in front of the disk. A light source behind the disk provides excitation. As the disk rotates in response to the input variable, the opaque areas on the disk pass between the light source and the sensors, interrupting the light beam and modulating the sensor output in accordance with the selected code. Optical systems focus the light on the coded disk. Mirrors, prisms, lenses, fiber optics, and optical slits or diffraction gratings perform this function.

Fiber optics are light pipes which are used to guide light from the source to the readout station. They are composed of glass fibers made into bundles and operate on the principle of total internal reflection, such that light imposed at the end of one fiber appears at the other end by multiple reflections through the fiber length. By using identical length fibers for any pair of sensors, identical optical paths are formed, stabilizing phase relationships. Imaging fiber optic techniques may be employed to compensate for rotary encoder disk eccentricity, or, as a folded optics system, to double the basic scale resolution of linear encoders.

Light detection can be performed by one of several devices. Material for all types of light detecting devices are selected from groups III, IV, V of the periodic chart and lie halfway in the chemical spectrum between metals and nonmetals. As such they are semiconductors. Each device responds to light in a different manner. Photovoltaic cells, such as selenium or silicon, generate an electric current when exposed to light. The resistance of photoconductive cells varies with light intensity. Such cells are usually made from cadmium sulphide or cadmium selenide, depending on the required response or the portion of the light spectrum for which sensitivity is desired. Current capability varies with the intensity of incident light. Photodiodes are similar to photoconductive cells. Photodiodes are used because their small areas allow very high frequency response. They are generally run with a

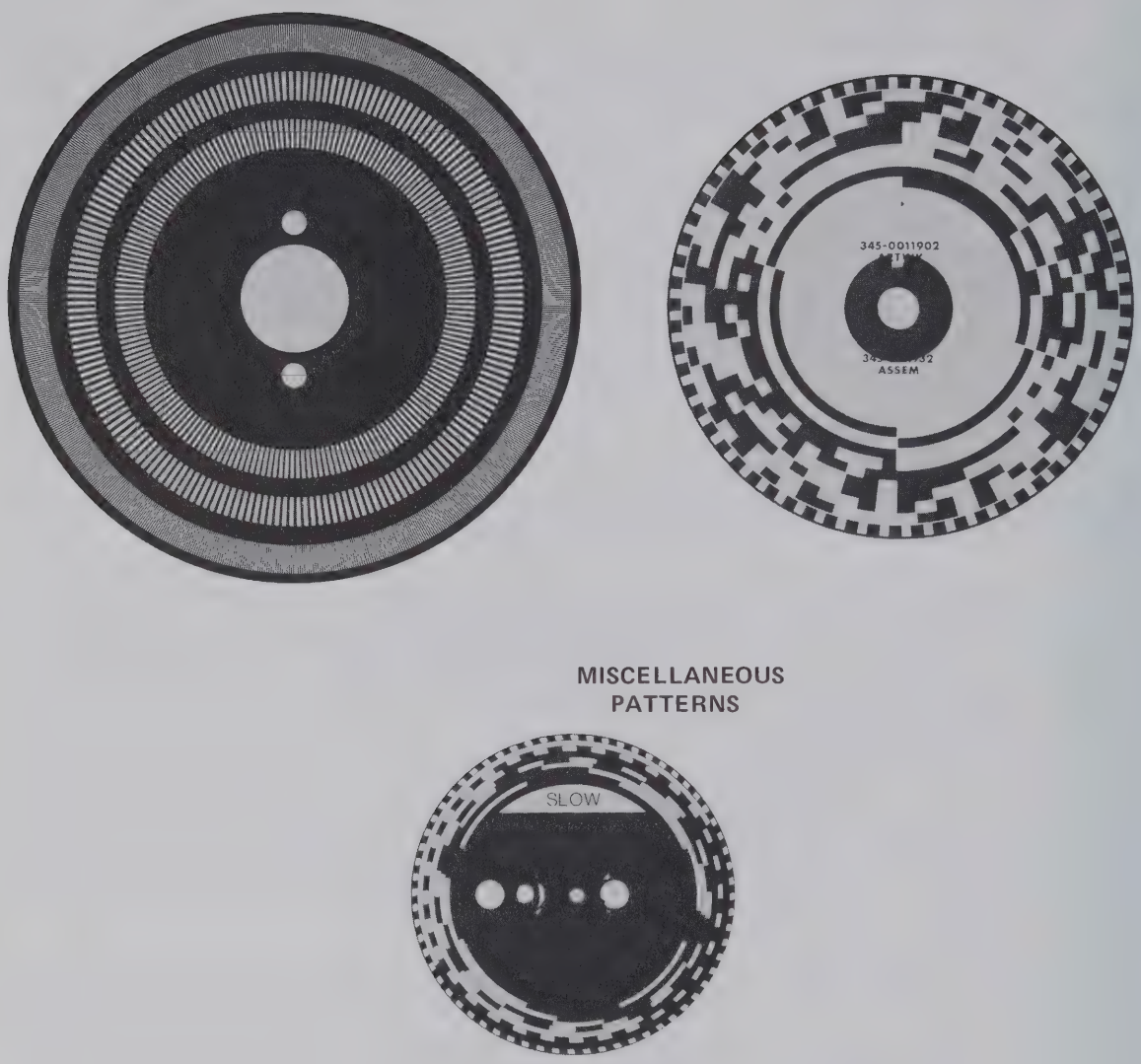

Figure 3-3. Encoder Disks

back bias and the reverse leakage current is modulated by the light. Phototransistors are photodiodes with built-in transistor amplification. Their frequency response is limited and they are temperature sensitive. Silicon controlled rectifiers (SCR's) act as sensitive high current switches when exposed to light.

Light sources for optical encoders may be incandescent or solid state depending on the environmental and cost requirements.

A stiff, lightweight filament is used in the miniature incandescent lamp to achieve superior resistance to mechanical shock and vibration. In this manner, bulb life is lengthened, allowing nonreplaceable bulb assemblies to be permanently mounted within the encoder.

Solid-state light sources offer extremely long life, excellent shock recovery in excess of 100 G's but less total luminescence than the incandescent bulb.

Performance of the contact, magnetic, and capacitive encoders is limited by the minimum practicable dimensions of sensors or of segments on the coded disks. The optical encoder is limited, not by these factors, but by precision of the mechanical bearing assemblies. Of the encoder types optical encoders are generally more expensive and provide the highest performance. When first developed, the optical encoder could not withstand extreme environmental conditions. However, there has been much improvement in this area in recent years. Optical encoders are best applied in situations where high speed, accuracy, resolution, and extended service life are required.

INCREMENTAL VS. ABSOLUTE OUTPUT

In the preceding discussion, reference was made to a coded disk pattern like that in Figure 3-1 for which the encoder output is a digital word representing the absolute angular position of the encoder shaft; hence the designation absolute encoder.

If the coded disk pattern is replaced with a uniform pattern such as a series of equally spaced radial lines, encoder output becomes a series of electrical pulses that can be counted to determine shaft position relative to some reference point. This configuration is called an incremental encoder.

The incremental encoder is the simpler since the only requirement is generation of a repeated signal for equal increments of shaft angle. The encoder may also contain a zero reference marker. The direction of shaft rotation can be readily detected through one additional code sensor. Circuitry is simple and power requirements modest. High resolutions can be achieved in small units, particularly in the optical types.

There are advantages to such an encoder and weaknesses as well. If, for any reason, power to the encoder is interrupted, or a transmission or reception failure occurs counts will be lost. The error will persist until the zero reference has been sensed. Zero reference is a special signal produced once per revolution of the rotary encoder or at the beginning of linear encoder travel. Some means must be provided for reading the output of either encoder. The incremental encoder normally employs a bi-directional counter with two data lines. The 2^N absolute encoder requires N data lines. In systems with more than one encoder the counter can be appropriately equipped with memory for time sharing.

In many applications, the incremental encoder represents a nearly ideal solution to the encoding problem. For example, incremental encoders without zero reference are used in many x-y plotters. In this application, the encoder is used in the floating zero mode because

the counter rather than the encoder defines the zero point by being cleared and zero reset on command. The counter is a special register used to accumulate the sum of encoder pulses.

ENCODER ERROR

Encoder error is composed of quantization error and instrument error. Quantization error is fundamental to all digital equipment because of the quantum nature of digital codes. In a perfect encoder with no mechanical, optical, or electronic deviation from the ideal, the mean angular position of the input shaft for a given readout is defined as the angular position midway between the transition from the next lower readout to the transition for the next higher readout. The quantization error is the deviation of the input shaft from the mean position for a given readout, with the maximum error ±1/2 of the angular rotation between two successive bits. For example, a rotary incremental encoder that generates 360 pulses per revolution has a quantization error of ±1/2 angular degree. (See Figure 3-4.)

Figure 3-4. Encoder Resolution

Instrument error is introduced by the actual manufacturing and assembly process and is defined as the difference between the shaft angle as indicated by the encoder and the actual shaft angle at the midpoint of the given readout. Most manufacturers limit this error to about the same magnitude as the quantization error. The manufacturer's instrument data sheet will normally specify the instrument error. However, in applications involving a large number of readouts, a statistical specification of encoder error is more significant. The standard quantization error combined with the standard deviation of instrument error produces the standard deviation of total encoder error. This figure is generally less than the quantization error alone, but is determined by individual manufacturers for each product.

4. THE OPTICAL INCREMENTAL ENCODER

As noted in the preceding sections the optical incremental encoder is widely used to monitor rotary and linear motion. In this section the encoder produced by DRC will be described and the major advantages of its design will be discussed.

THEORY OF OPERATION

The principle of incremental encoder operation is generation of a symmetric, repeating waveform that can be used to monitor the input motion. The basic components of the optical incremental encoder are the light source, light shutter or chopper, light sensor, signal conditioning electronics, and shaft bearing assembly. The encoder's mechanical input operates the light shutter which modulates the intensity of the light at the sensor. The sensor's electrical output is a function of the incident light. The encoder's electrical output is produced from the sensor output by the signal conditioning electronics and can be either

- a sine wave,
- a shaped, square wave, or
- a series of equally spaced pulses produced at regular points on the waveform.

In its most fundamental form the light shutter is an optical slit and a glass plate inscribed with alternating lines and spaces of equal width. When the plate is moved relative to the slit, the light transmitted by the slit rises and falls. In practice, a larger reticle which intercepts 20 or more lines is used instead of a single slit (Figure 4-1). The reticle transmits more light and is easier to align. Another advantage of the reticle is that line imperfections such as scratches, pinholes, and dust particles do not significantly affect sensor output since the incident light is averaged over many lines.

The encoder's mechanical input is coupled to the moving plate to operate the light shutter. In the position shown, the sensor will indicate maximum light intensity. After the moving plate has advanced one line width the opaque lines on the moving plate will cover the transparent lines on the stationary plate and light transmission will be minimum, theoretically zero. Because in practice the light source cannot be fully collimated, and

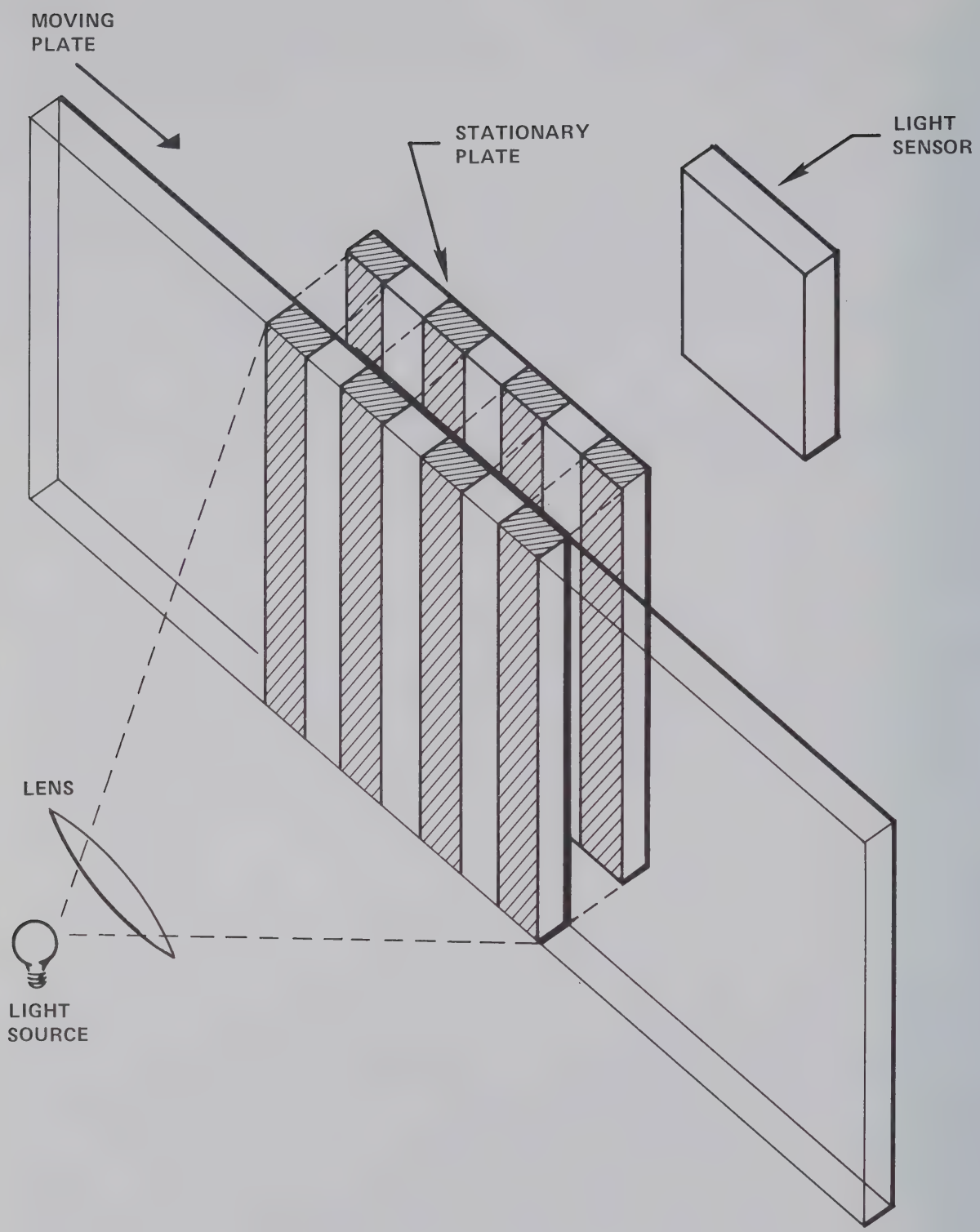

Figure 4-1. Light Shutter

because some clearance must be maintained between the stationary and moving plates, some light will leak through the shutter in its fully closed position. Consequently, the minimum light transmission will be nonzero.

Waveform of the sensor output is theoretically triangular (Figure 4-2) but is, in practice, more nearly sinusoidal. e_{max} depends on output of the light source, shutter transmission when fully open, and sensitivity of the sensor. e_{min} depends on shutter leakage when fully closed. e_1, the peak-to-peak voltage, is the usable component of sensor output, and, in practice, is limited by the effectiveness of the shuttering mechanism; specifically on the ability to minimize shutter leakage. This is accomplished by collimating the light source as well as possible and by limiting clearance between the glass plates to that necessary to accommodate misalignment of the disk and shaft.

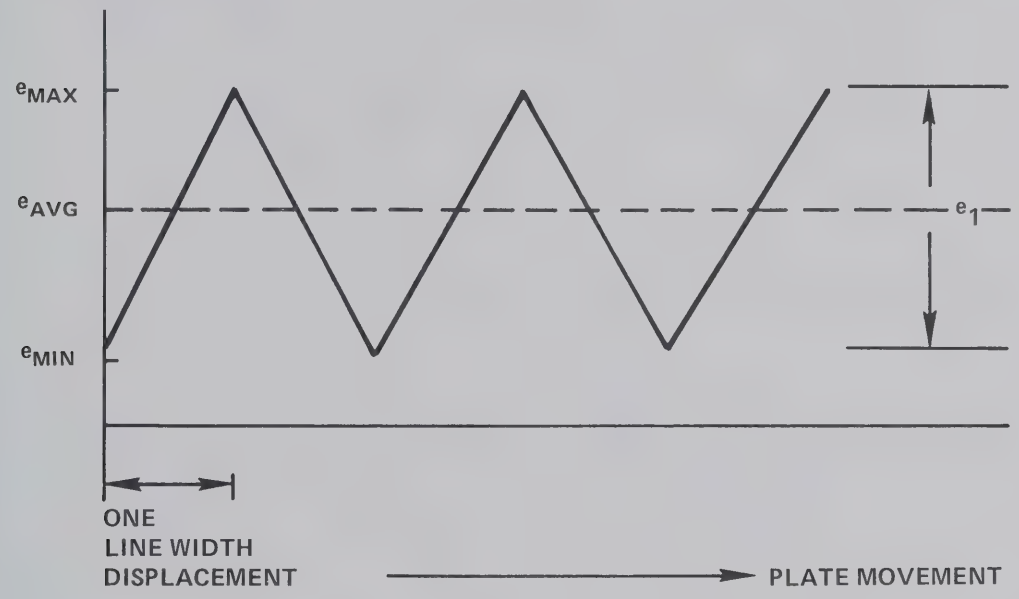

Figure 4-2. Detector Output

A common method of digitizing encoder output is to produce a pulse each time the waveform of Figure 4-2 passes through its average value, e_{avg}. Ideally, the waveform crossings are equally spaced and correspond to one line width displacement of the moving plate. The resulting series of equally spaced pulses can be used to precisely monitor the encoder's mechanical input.

The primary problem with this arrangement is illustrated in Figure 4-3. The solid waveform is the same as that of Figure 4-2. The dotted waveform represents signal drift caused by changes of the lamp's excitation voltage or sensitivity of the light sensor. It can be seen that, after drift, the series of pulses generated when the waveform passes through e_{avg} will no longer be equally spaced. Encoder performance is severely degraded since minimum resolution is now twice that if there were no signal drift. (The minimum waveform

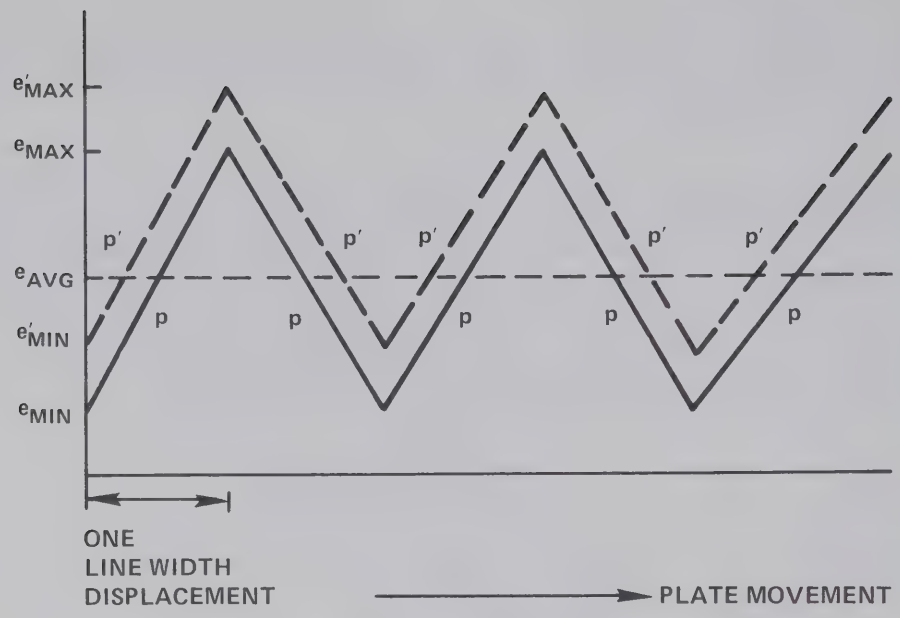

Figure 4-3. Effect of Signal Drift on Spacing of Encoder Pulses

dimension that is constant after drift is the spacing between the first and third pulses of any three pulse series instead of the spacing between adjacent pulses.)

Compensation for signal drift is achieved with another sensor in combination with the same moving plate. The stationary component of the shutter for the second sensor is fixed 180 electrical degrees out of phase with respect to the stationary plate of the first sensor. The same light source illuminates both shutters. (See Figure 4-4.) When the maximum light is incident on the first sensor, the second will see minimum light. Because the incident light intensity at the two sensors is out of phase, the resulting electrical outputs will be out of phase as in Figure 4-5. The waveform that results when the two sensors are connected in opposition (i.e. "push-pull" or "head-to-tail") is the equivalent of algebraically subtracting the output of sensor No. 2 from that of sensor No. 1 as shown in Figure 4-6.

Several characteristics of the resultant waveform are important. First, its average value is theoretically zero. (In fact, the inevitable mismatch between the two waveforms results in some small deviation from zero. This deviation can be suppressed by an external bias voltage.) Second, the peak-to-peak voltage is now twice that of the separate sensors. This means that change of the interpulse spacing for a given shift of the resultant waveform (like that shown in Figure 4-3) is only one half of what it would be for the same single sensor.

This "push-pull" arrangement further improves encoder operation by reducing the effects of changes in light excitation voltage and detector sensitivity. Any light intensity change that affects both sensors equally will cancel. Likewise equal detector sensitivity changes will cancel (e.g. temperature dependent variations).

The output signal just described is called single channel output. In practice, the typical encoder has two channels. The second output is produced with another pair of sensors

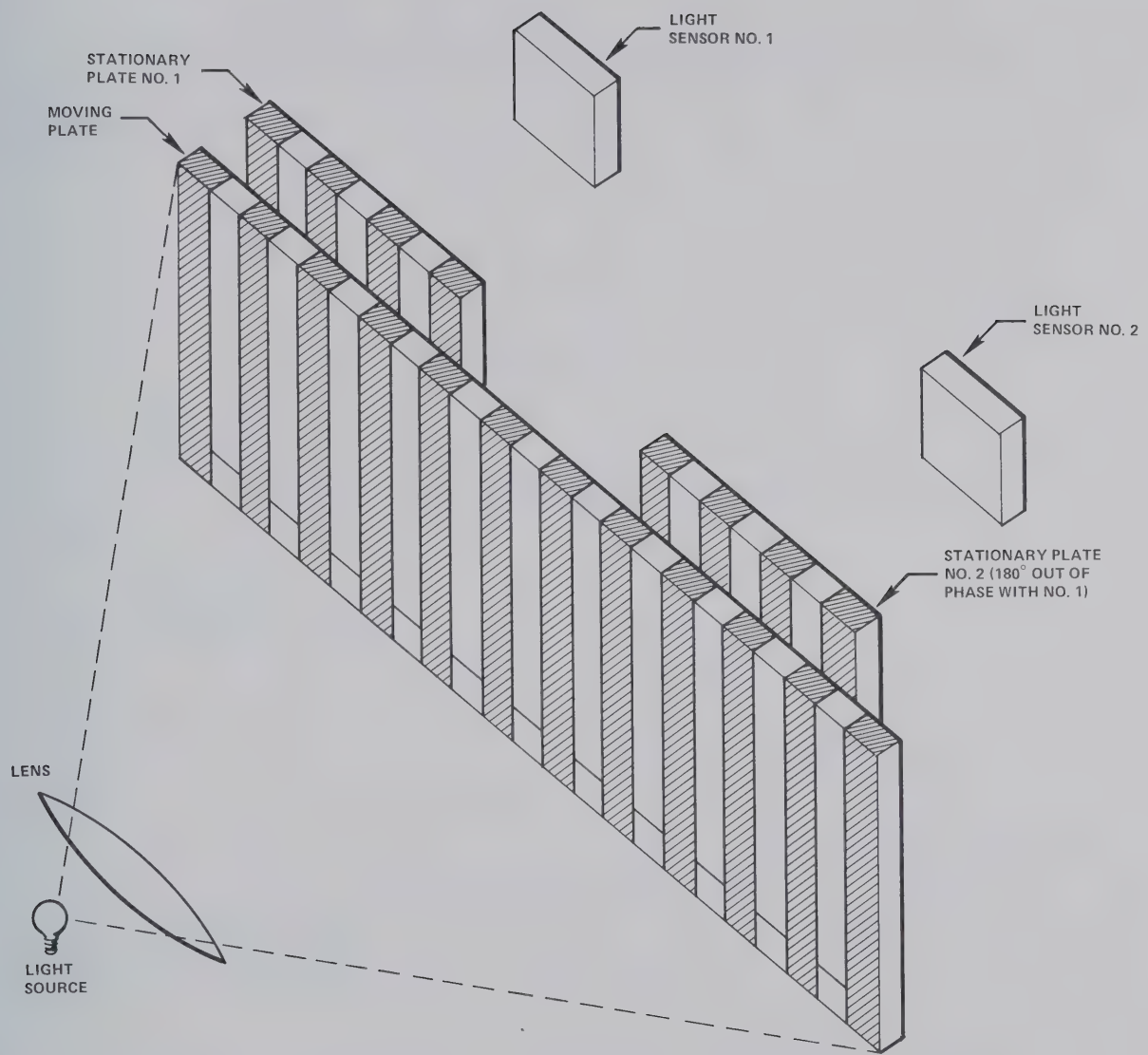

Figure 4-4. Two Cell Arrangement for Signal Drift Compensation

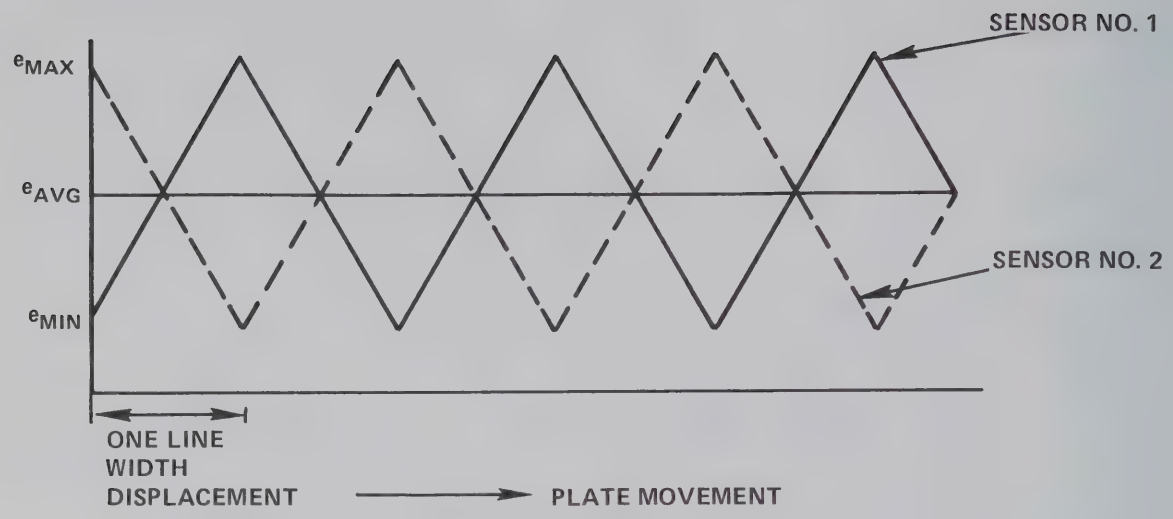

Figure 4-5. Outputs of Two Sensors Fixed 180° Out of Phase

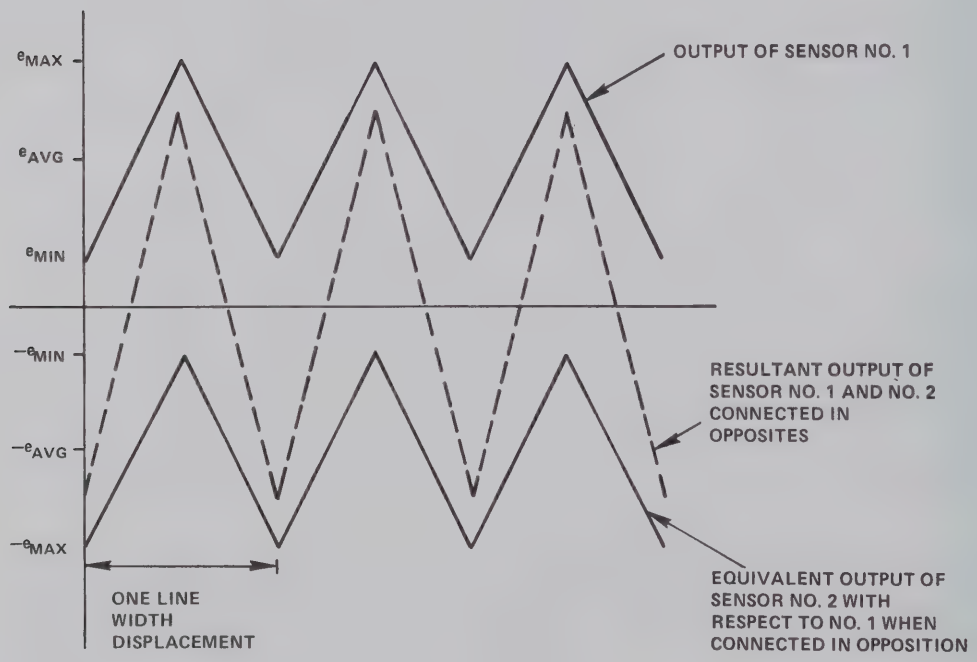

Figure 4-6. Output of Sensors No. 1 and No. 2 Connected in Opposition

displaced electrically 180° from each other and 90° from each of the sensors of channel A. The resulting waveforms are shown schematically in Figure 4-7. Interpulse spacing for the two channel encoder represents movement of one half line width. For example, if the glass plate previously described is a glass disk the lines become sectors on this disk. If there are 1024 such lines and 1024 spaces, the number of pulses generated per revolution of the disk is 4 × 1024 = 4096. The angular movement represented by the interpulse spacing is 5.27 minutes of arc.

$$\left\{ 360 \frac{\text{degrees}}{\text{Revolution}} \times 60 \frac{\text{minutes}}{\text{degree}} \times \frac{1}{4096 \frac{\text{Counts}}{\text{Revolution}}} \right\}$$

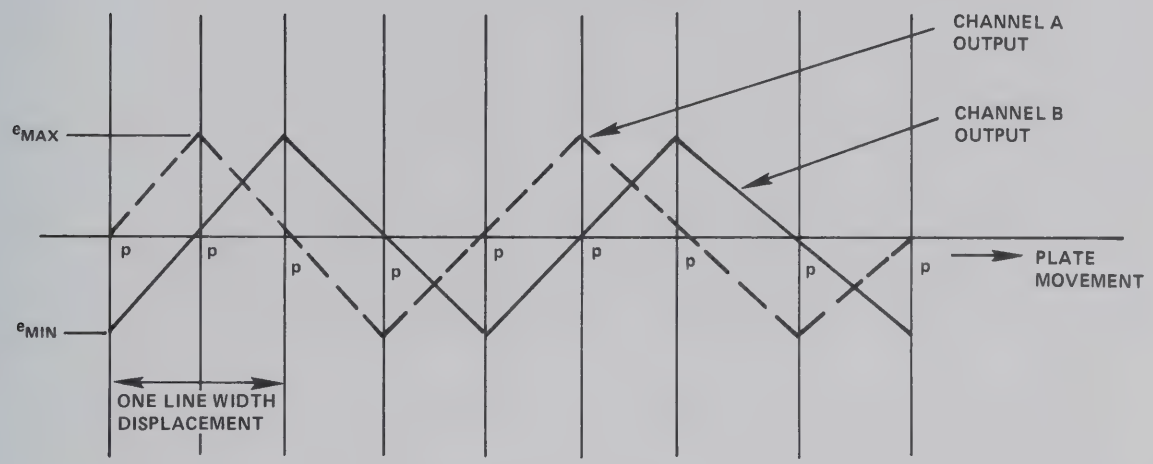

Figure 4-7. Dual Channel Output Phased in Quadrature

The sensors used in DRC encoders are large-area silicon junction diodes commonly called cells. To obtain the ideal waveforms shown in Figure 4-7, the cells connected in the push-pull arrangement must track one another. That is, equal changes in input must produce equal output changes. When the components do not track there will be a symmetry shift in the resultant waveform like that depicted in Figure 4-8C.

Symmetry is defined as the condition where the zero dc level of the output waveform divides the waveform into two states of equal duration when the encoder shaft is rotated at constant speed. That is, the waveform is symmetric if it has a zero mean value. If the mean value is not zero, the dc level which divides each cycle of the waveform into equal parts is the symmetry level. This level causes the zero crossing to shift markedly.

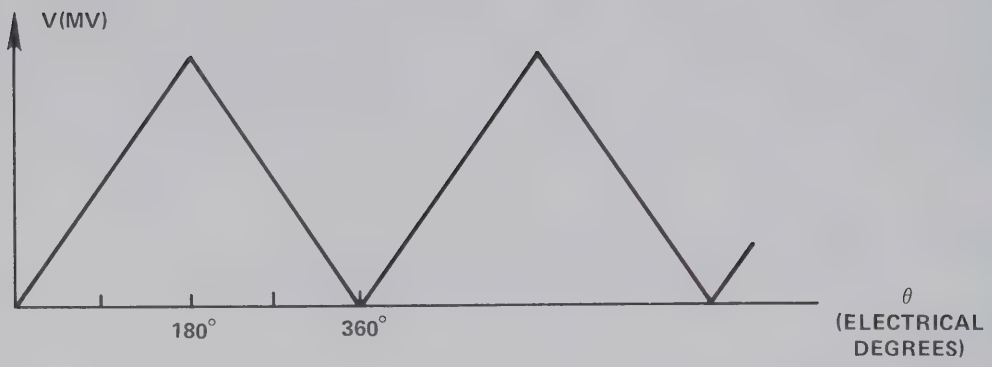

a. CELL NO. 1 OUTPUT VOLTAGE

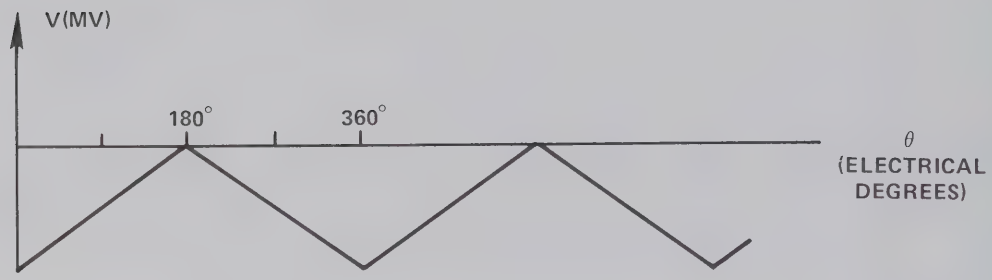

b. CELL NO. 2 OUTPUT VOLTAGE

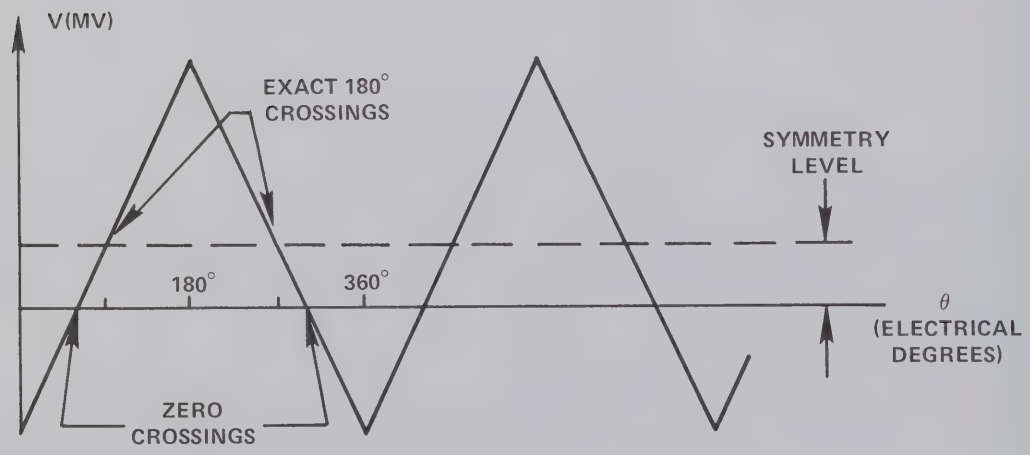

c. RESULTANT OUTPUT FROM CELL NO. 1 AND
CELL NO. 2 IN PARALLEL

Figure 4-8. Result of an Unbalanced Pair of Solar Cells

Symmetry shift in a given channel is minimized by

- using cells of equal temperature and light sensitivity,
- placing the cells as close together as practical, and
- using one light source to illuminate both cells.

Frequency characteristics of the silicon cells are important for high speed applications. Frequency response depends on load resistance and cell size. The output of a pair of 0.200 in. X 0.050 in. cells can drop 10 to 25% when operated into a 1000 ohm load at 50 kHz. This does not limit the maximum usable cell frequency to 50 kHz however. What is important is the shift in zero crossing with frequency. With a perfectly balanced channel the zero crossings are unchanged, but with an unbalanced pair of cells, the shift may be appreciable at high speeds because the outputs of the two cells drop unequally. The average output from each individual cell of a back to back pair does not change with frequency. However, as the ac components fall with frequency, any unbalanced dc component becomes more significant and hence has the effect of increasing the phase error. Figure 4-9 illustrates the output of typical cells and the resultant output signal at low and high frequency operation. The average value of each cell remains the same regardless of frequency, but the peak to peak output changes. The two resultant waveforms show that the symmetry level remains the same. At low frequency the 180° crossing is in error by 10 electrical degrees, but at high frequencies the crossing error increases to 18 electrical degrees. This error can be reduced somewhat by inserting a fixed dc signal of equal magnitude but opposite polarity to the symmetry level.

COMPONENT DESCRIPTIONS

The following is a detailed description of the major encoder components and the significant influence of these on encoder performance.

Light Sensor

The sensor used in most applications is a photovoltaic, wide-area, silicon cell. Figure 4-10 shows the construction of the silicon cell. At the heart of the sensor is an area of single crystal, "N" type, silicon material with a "P" type layer diffused into it. This crystal generates an output when illuminated. Solder connections are made to the crystal and the signal is brought out through the leads.

Light energy is comprised of small energy packets called photons. When a photon containing sufficient energy strikes a silicon crystal, a hole-electron pair is created. This pair diffuses and is collected by the P-N junction. When large quantities of photons are involved, a voltage difference appears between the "P" and "N" regions. When a load is connected across the crystal, the voltage potential causes a current which is supplied by the light-generated hole-electron pairs.

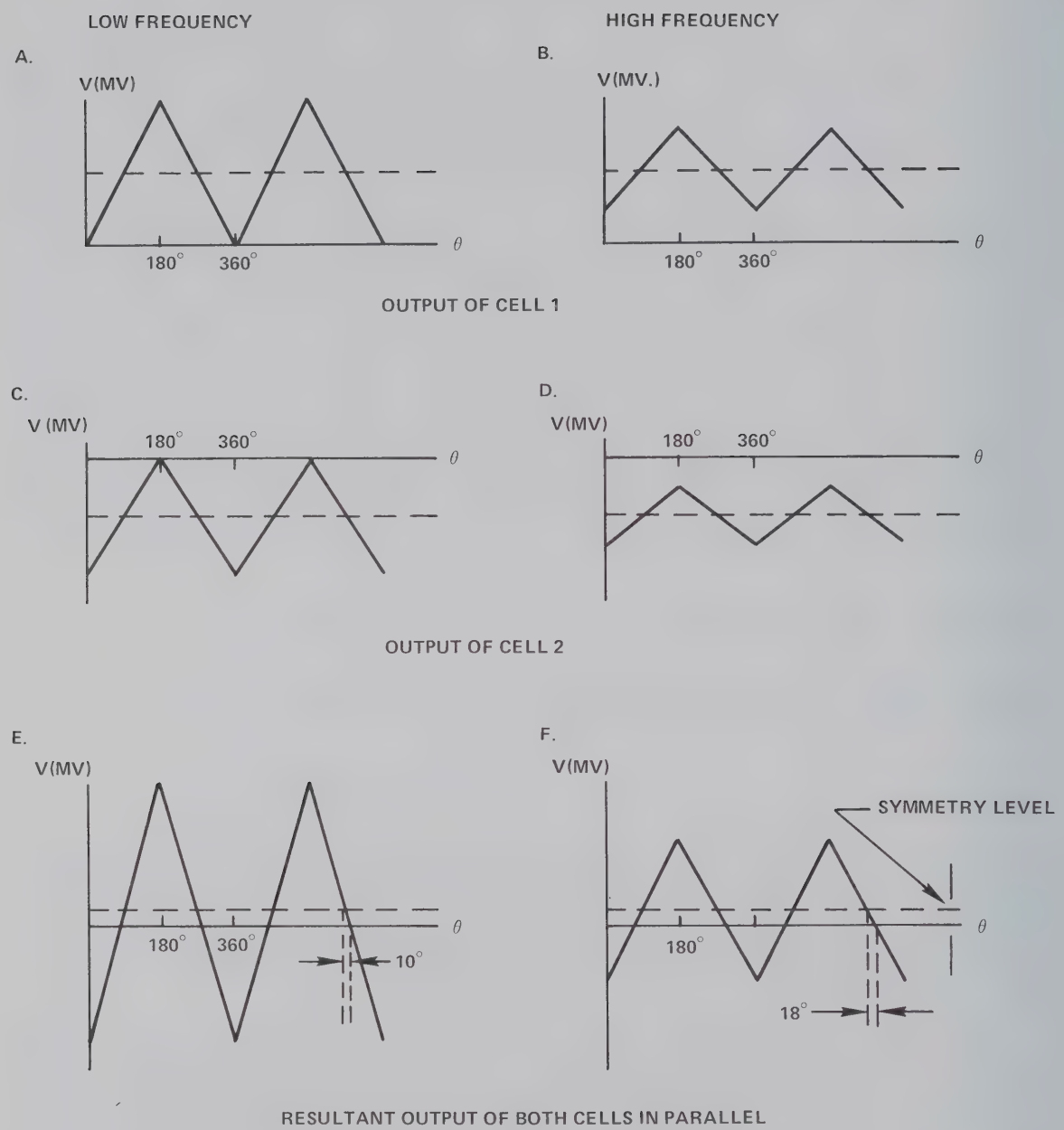

Figure 4-9. Typical Frequency Response of a Pair of Unbalanced Cells

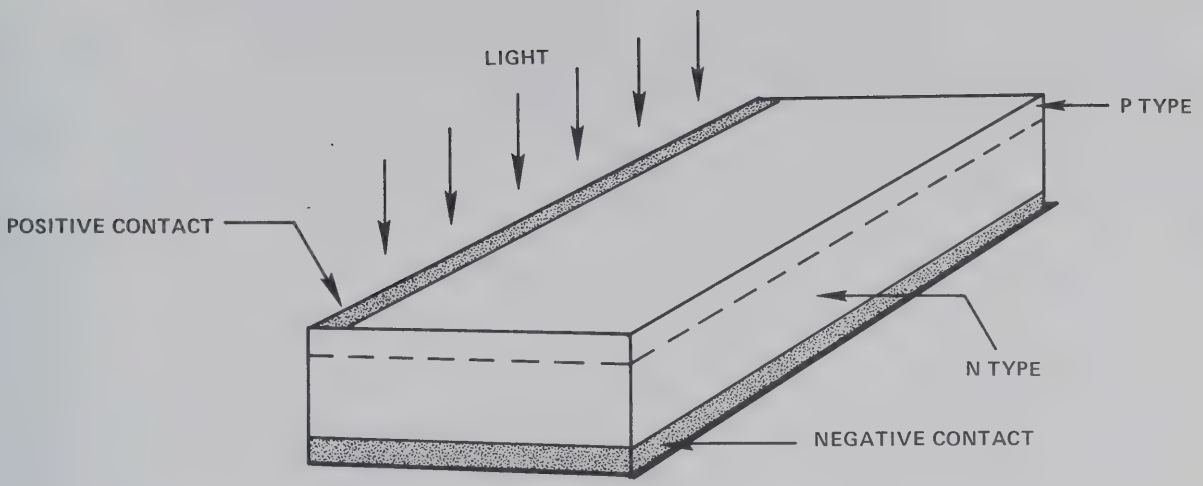

Figure 4-10. Solar Cell Construction

The silicon cell has several advantages over other photosensitive materials. Unlike the photodiode and phototransistor, operation of the silicon cell requires no external voltage. Further, the silicon cell is a current source and matches the transistor input characteristic. Spectral response of the silicon cell, shown in Figure 4-11, is relatively broad and is well matched to the outputs of both the tungsten filament lamp and the light emitting diode. The silicon cell's coefficient of output signal versus light intensity in the infrared region is greater than that of any other candidate material. Frequency response of the silicon cell is excellent, and silicon is resistant to most environmental hazards.

Light Source

Both lamps and light emitting diodes (LED) are available in DRC encoders. Lamps offer greater light output than LED's but have shorter lives.

Lamp life can be extended somewhat by dropping the operating voltage. The magnitude of this drop is limited by lamp output and the spectral response of the silicon cell. Lamp output is proportional to the 3.5 power of the operating voltage in the vicinity of the lamp rating. The spectral response of tungsten, illustrated in Figure 4-11, shifts to the right as the operating voltage is lowered. As a consequence less of the lamps light output is within the spectrum to which the silicon cell is sensitive. The result is a tradeoff between lamp life and signal strength. The lamps currently used are operated at 5 volts and have an average life of 40,000 hours at that rating.

LED's are used in applications that require improved tolerance for mechanical shock and vibration. Although LED output is less than that of lamps, output is concentrated near the peak of the silicon cell spectral response. The resulting signal strength is 20 to 50% lower

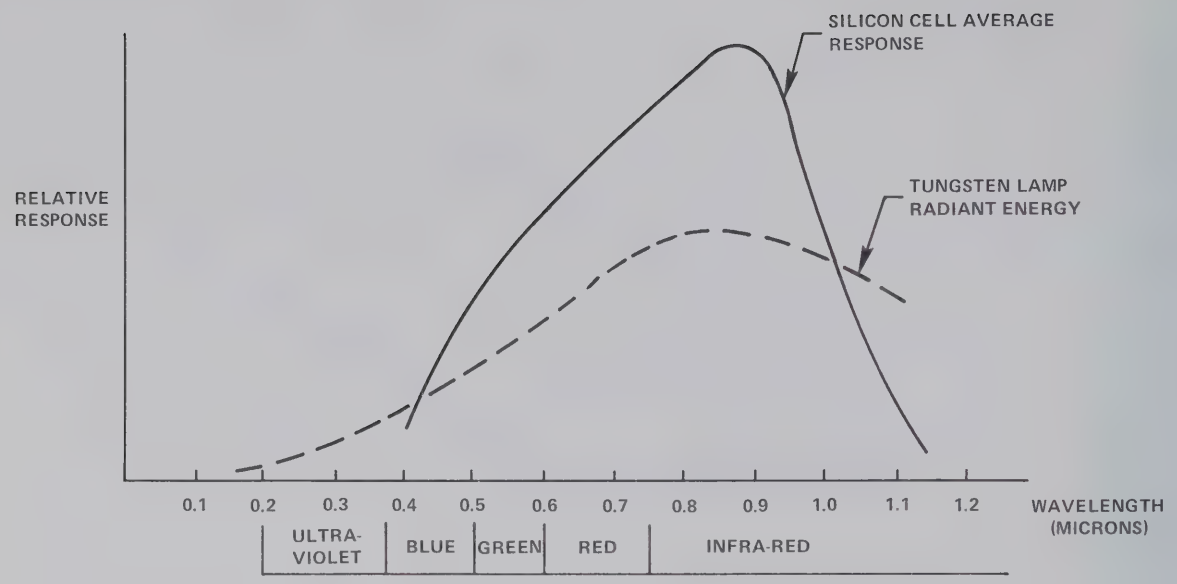

Figure 4-11. Spectral Response of Silicon Cell and Spectral Distribution of Tungsten Lamp

than when a lamp is used. Another penalty of the LED is its high temperature sensitivity. LED output drops about 1% for each 1°C temperature increase. Even so, the LED is an acceptable solution to the problem of mechanical shock and vibration in many applications. Table 4-1 is a comparative summary of the important lamp and LED characteristics.

Table 4-1. Light Sources

	Lamp	*LED*
Life	40,000 hrs. max.	40,000 & up
Output	High	1/2 lamp
ΔOutput vs. Temp.	None	High
Shock + Vibr. Capabilities	Moderate	Good
Temp. Cycle Damage	Moderate	Low
Output Var. vs. Voltage	High	Moderate (Linear)
Max. Operate Temp. at Rated Power	200°F	150°F
Source Size	Moderate	Small
Cost/Channel	$ .50	$2.50

Shutter

One of the critical encoder components is the shuttering mechanism. The manufacture and assembly of this device is the basis of the encoder's resolution and accuracy. The material of which the scale or disc is made can limit the suitability of the encoder for use in some environments.

Scales can be made by producing

- slits in an opaque material like metal, or
- opaque lines on a transparent material like glass or plastic.

Metal scales are normally low resolution devices because the minimum slit width is approximately the metal thickness, and very thin scales will not support themselves. The solution is to support the metal with a transparent material; the second method of making scales.

Both glass and plastic scales can be used. Glass, being rigid, provides greater accuracy. The disadvantage is breakage. The opaque lines can be metal or photo emulsions. Metal on glass scales are extremely durable and are easily cleaned with acetone and cotton. Photo emulsion scales are more easily damaged and must be carefully handled. Also, light transmission of the photo emulsion scales is reduced about 12% by the clear gelatin that remains in the undeveloped areas.

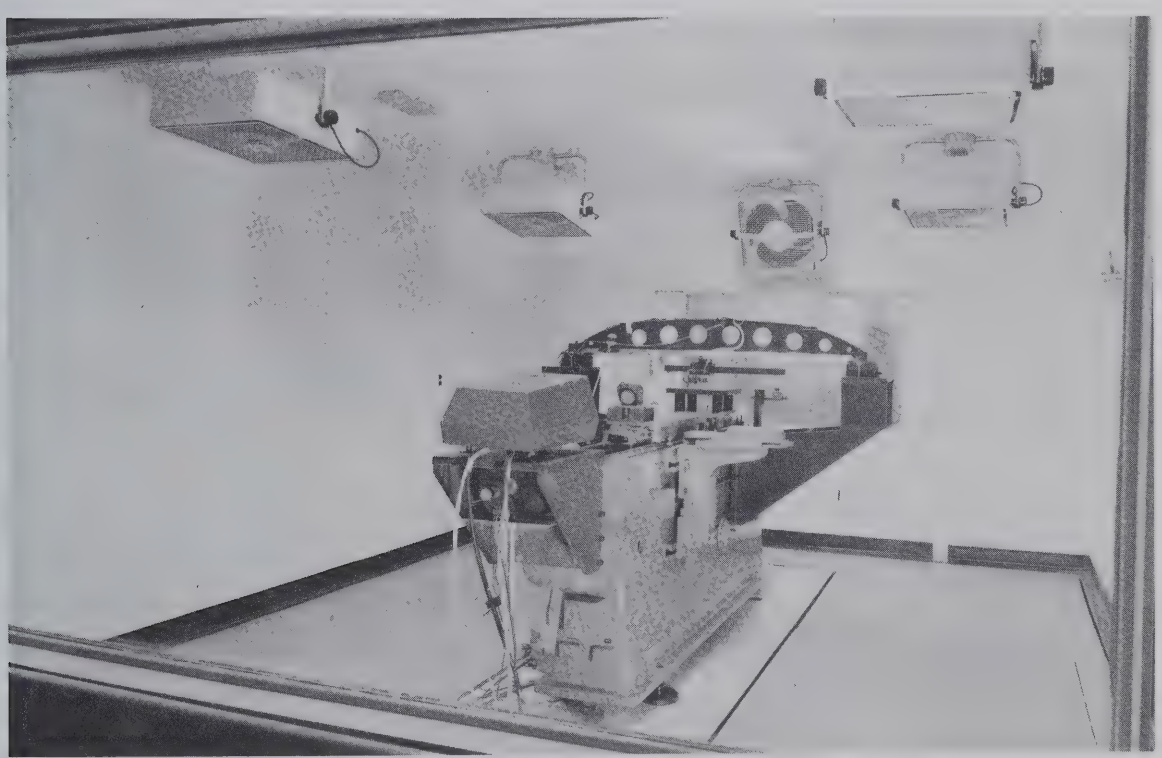

Figure 4-12. Linear Ruling Engine

DRC linear scales are produced with the Metrigraphics Metrifilm^{tm} process of evaporating inconel on a soda-lime plate glass. Master scales for this process are produced with a numerically controlled linear ruling engine equipped with laser interferometer feedback (Figure 4-12). Dimensional standards for this equipment are traceable to the National Bureau of Standards.

Signal Conditioning Electronics

Encoder electronics perform the following functions

- generation of the output signal waveform,
- generation of complementary signals,
- direction sensing, and
- filtering.

The available output waveforms are illustrated in Figure 4-13.

The square waveform of Figure 4-13B is produced with a shaper circuit called a Schmidt Trigger. The shaper has two stable output states which are controlled by the amplitude of the input voltage.

Shaper output is fed to gates which generate the pulses marking the encoder signal zero crossings (Figure 4-13C). At this stage circuitry is also provided for sensing direction of movement (depending on whether the channel A waveform leads channel B or vice-versa).

The following are schematics of the logic circuitry and shaper electronics used in DRC's principal rotary-encoders. When signal conditioning is required similar electronics are used with the linear encoders.

Shaft Bearings

Stainless steel, prelubricated, instrument grade ball bearings are employed to minimize shaft friction in rotary encoders. Bearing assemblies are normally used in preloaded pairs to minimize axial and radial shaft play.

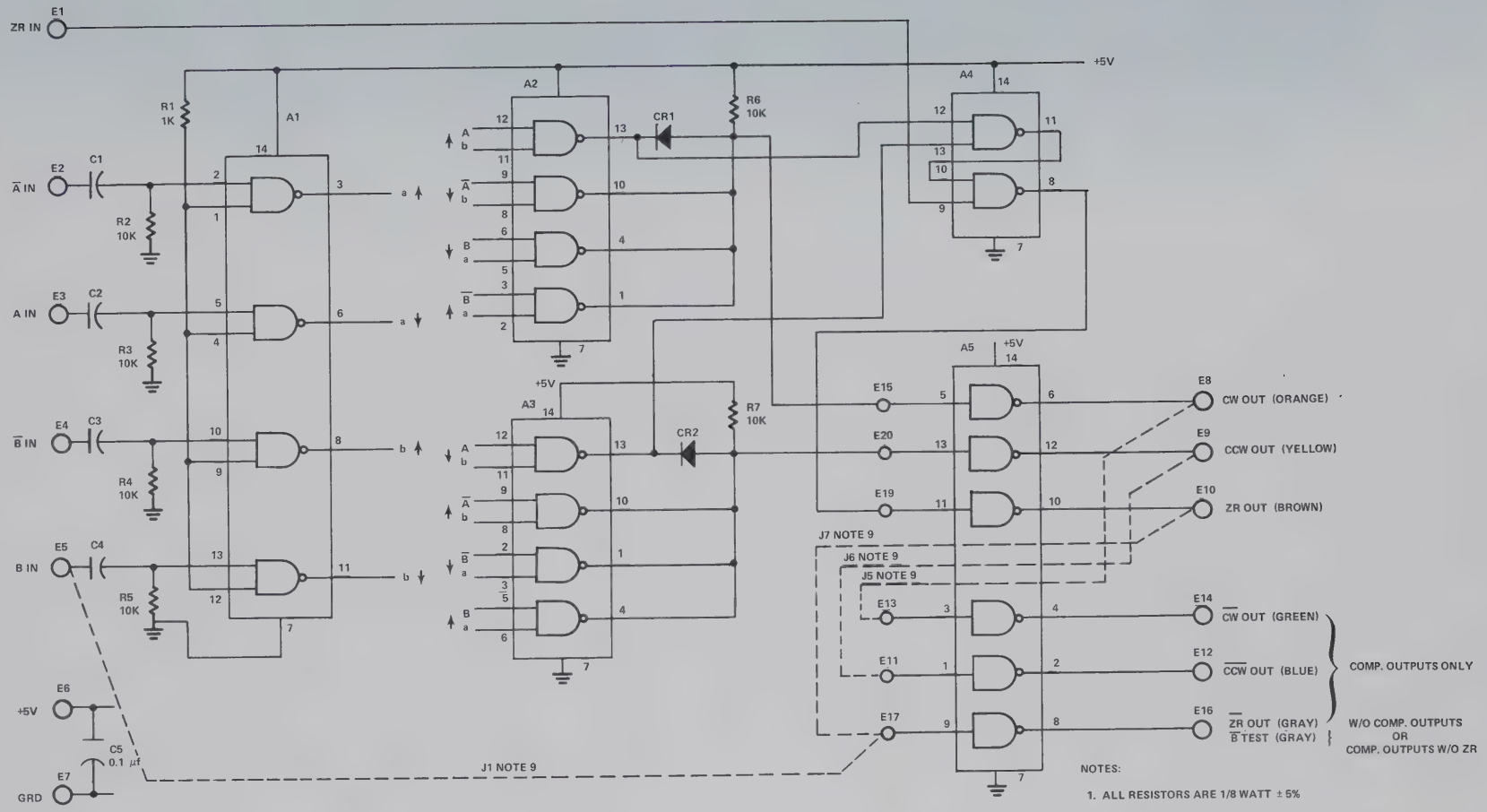

NOTES:

1. ALL RESISTORS ARE 1/8 WATT ± 5%
2. ALL CAPACITORS ARE ± 10%
3. A1 IS A 9946
4. A2 AND A3 ARE 7401
5. A4 IS A 7400
6. FOR 5V, 6V A5 IS A 7404
   FOR 12V, 15V A5 IS A 7416
7. FOR 2X LOGIC OMIT C1, C2, R2, R3
8. FOR 1X LOGIC OMIT C1, C2, R2, R3; OMIT CR1 AND CR2, REPLACE WITH JUMPERS J3 AND J4; JUMPER, J2, E2 TO E7.
9.

JUMPER	W/O COMP. OUTPUTS	COMP. OUTPUTS W/O ZR	COMP. OUTPUTS W/ZR
J1	X	X	OMIT
J5	OMIT	X	X
J6	OMIT	X	X
J7	OMIT	OMIT	X

10. ASSY C-5306 FOR COMP. OUTPUTS ONLY.

Schematic Logic Board (1X, 2X, 4X) Model 29, 35, 39 and 77

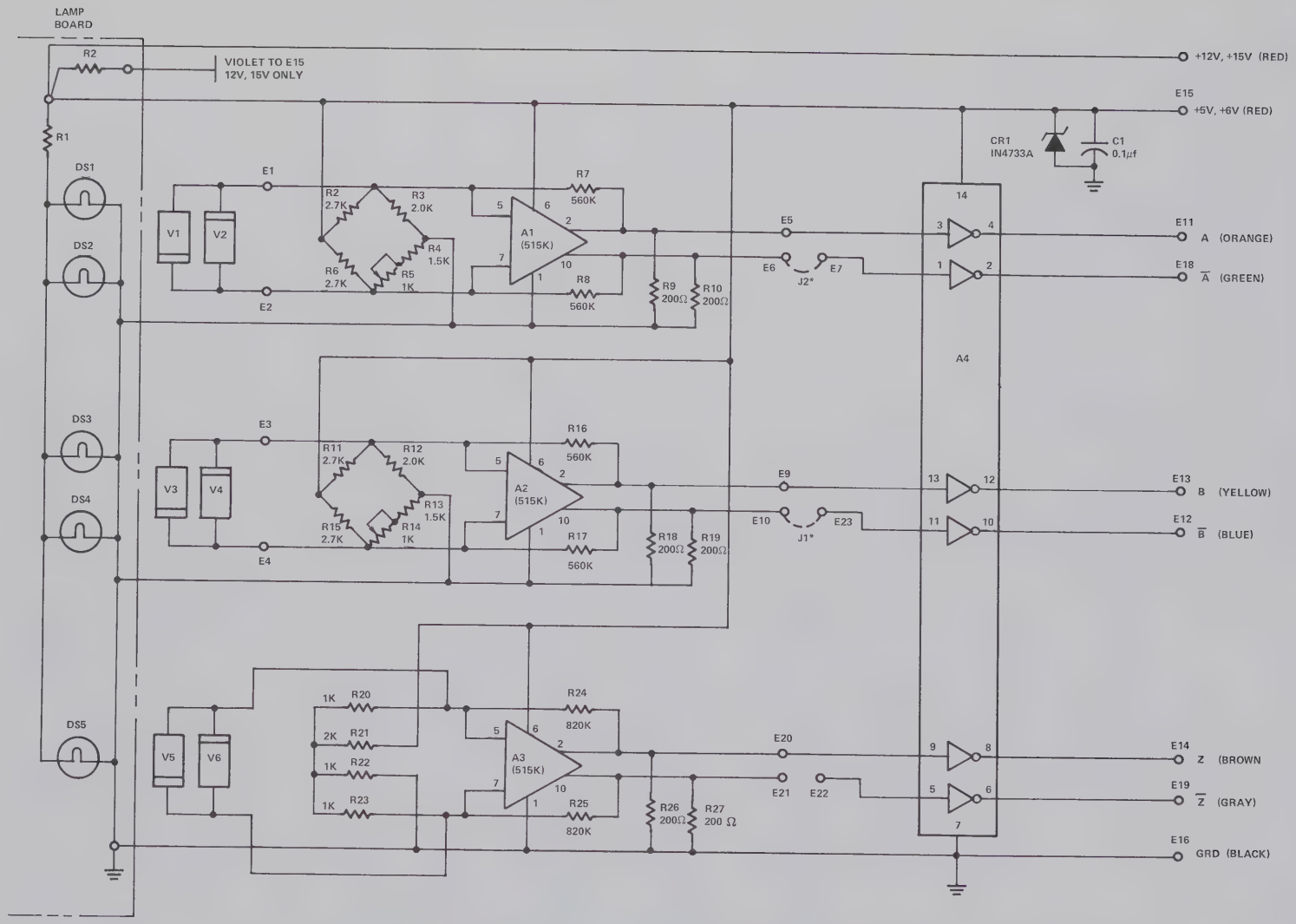

NOTE:

1. R2 ON LAMP BD IS ONLY USED AT 12, 15V.
2. A4 IS 7404 FOR +5, +6 (12V WITH LOGIC)
   7416 FOR +12, +15
3. CR1 IS ONLY USED AT 12, 15V
4. * LOGIC ONLY
5. ADJUST R5 AND R14 FOR ≈ ZERO DC OFFSET E5 TO E6, E9 TO E10

Schematic AMP-Shaper Electronics Model 35

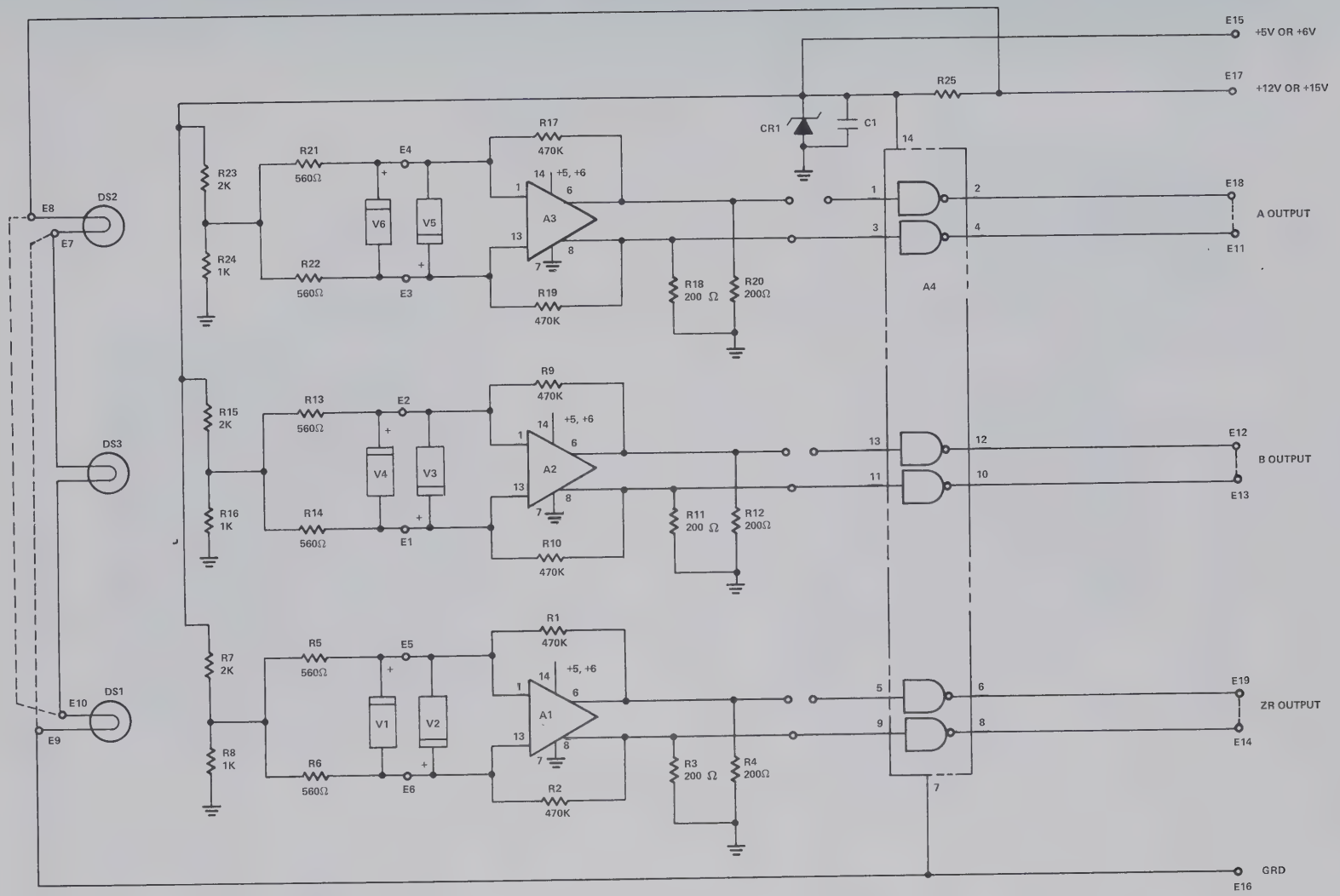

NOTES:

1. ALL RESISTORS ARE 1/4 WATT ±5% CARBON COMPOSITION UNLESS OTHERWISE SPECIFIED.
2. A1, A2, A3 ARE NE515A
3. CR1 IS A IN4733A
4. A4 IS A 7404 OR 7416

Schematic Amplifier-Shaper Electronics Model 77 and 29

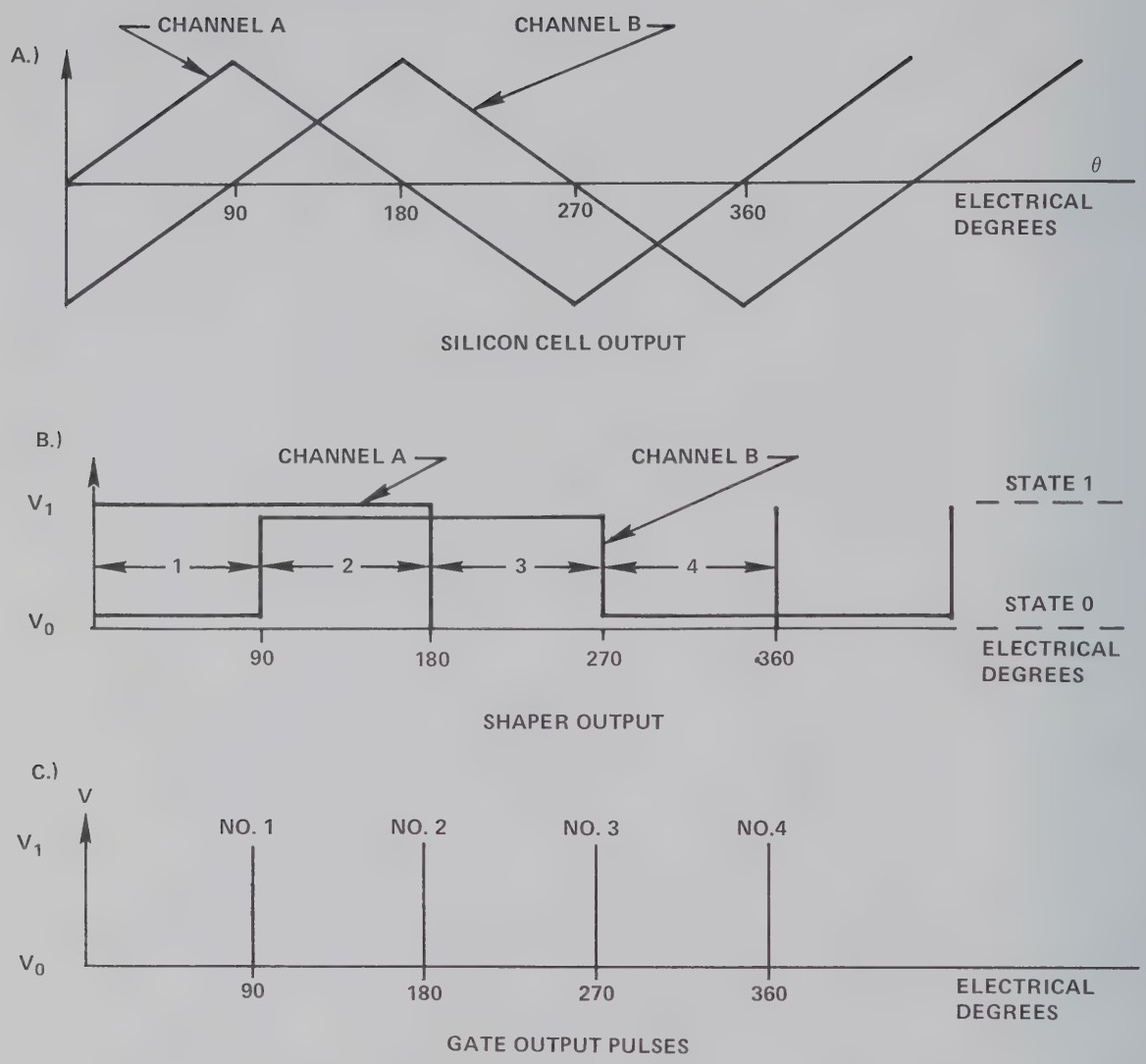

Figure 4-13. Encoder Output Signals

MECHANICAL ASSEMBLY

The fundamental mechanical considerations are

- alignment of the disk and reticle patterns concentric with the encoder's axis of rotation,
- maintenance of a constant, minimum separation of disk and reticle, and
- protection of the functional components from damage during manufacture and installation and from environmental attack during service.

Figure 4-14 shows the major rotary encoder components prior to assembly. Figure 4-15 is a cutaway view after assembly.

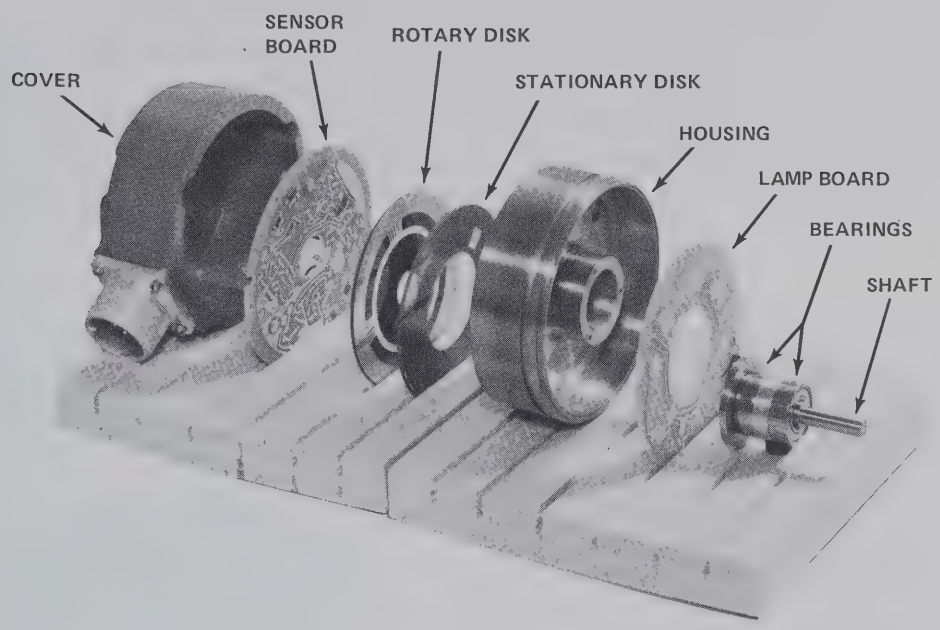

Figure 4-14. Major Rotary Encoder Components

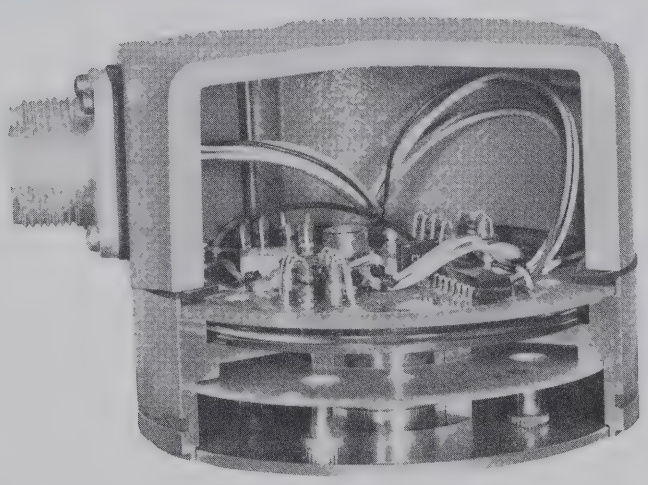

Figure 4-15. Rotary Encoder

Accurate concentricity is achieved before the epoxy, with which the disk is attached to the shaft, becomes hard. The disk pattern includes an opaque circle around the outer diameter. The outer edge is accurately round and concentric with the center of the radial sectors of the disk pattern. After the disk is set in the epoxy, the shaft is rotated and the pattern ring is inspected for radial runout with a microscope (Figure 4-16 and 4-17). If runout is observed, the direction and magnitude of the disk misalignment relative to its center of rotation is determined. The disk is then relocated and is clamped in place while the epoxy hardens. This method effectively compensates for bearing eccentricity as well, and total indicated runout can be held within 0.0002 inch. When greater accuracy is required a lisajous pattern is employed and TIR can be reduced to about 0.00005 inch maximum.

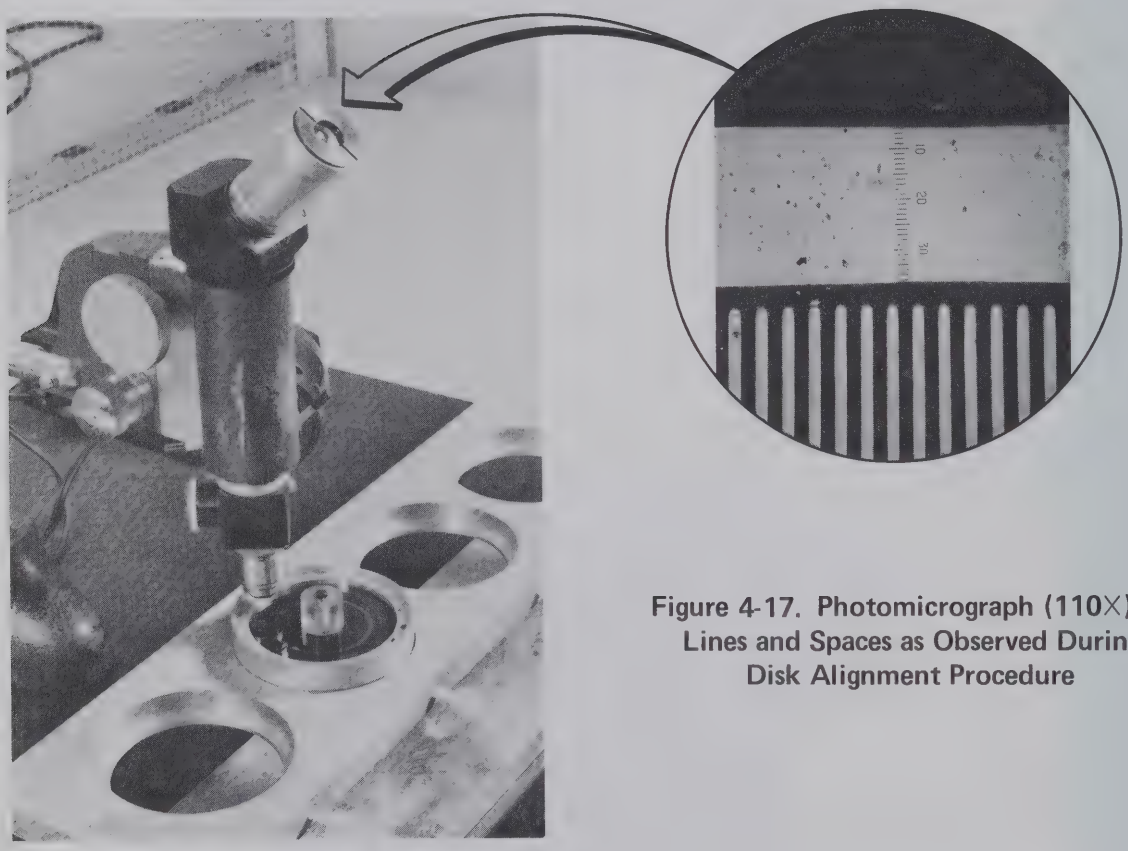

Figure 4-17. Photomicrograph (110X) of Lines and Spaces as Observed During Disk Alignment Procedure

Figure 4-16. Disk Alignment

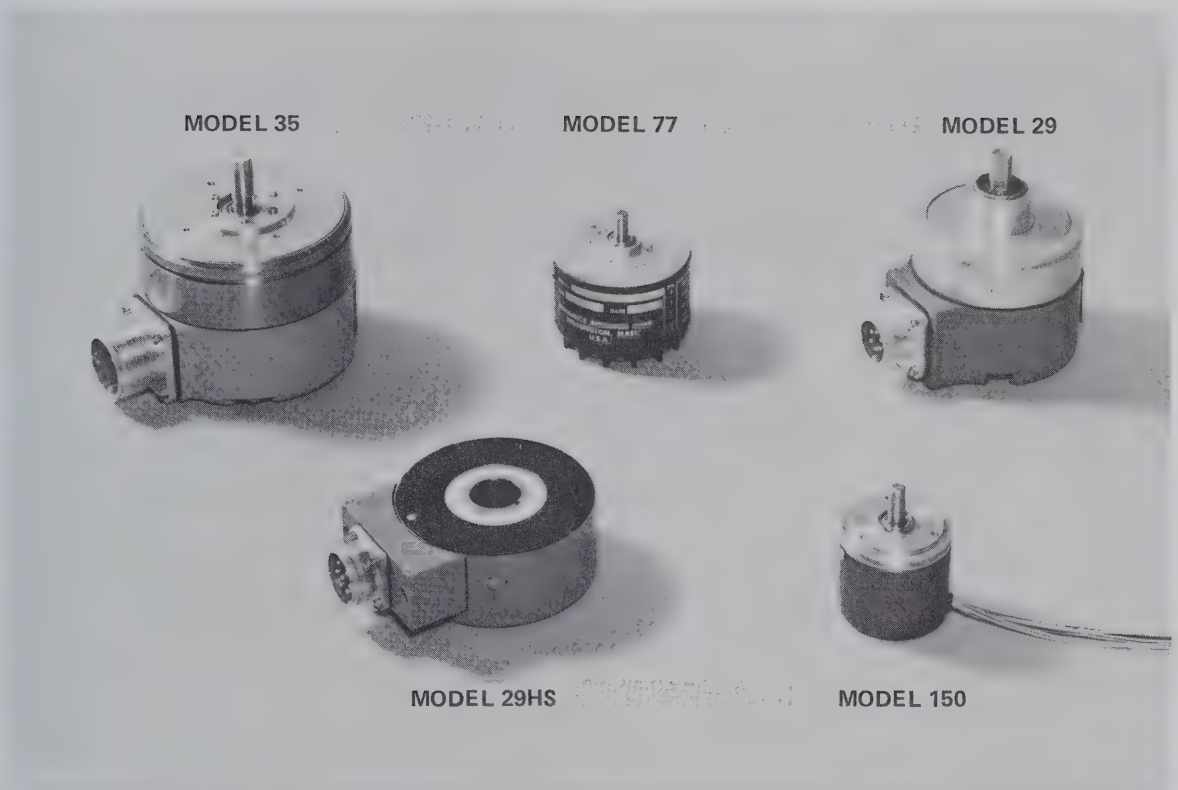

Figure 4-18. DRC Rotary Encoders

5. ENCODER INTERFACE CONSIDERATIONS

This section is a discussion of the major determinants of encoder life and error as well as the general electrical and mechanical considerations for interfacing DRC encoders with new systems. Manufacturer's product literature tends to be detailed, specific to one product, and is not generally appropriate for exploring design alternatives. Lack of general information on encoder applications can frustrate the first time user.

Whatever the encoder application, the following basic decisions must be made.

- *What signal level and waveform will be used,*
- *How the encoder output will be interfaced with the system,*
- *Whether a rotary or linear encoder will be used,*
- *How the encoder will be mounted, and*
- *How the mechanical input will be coupled to the encoder.*

SIGNAL LEVELS

The appropriate signal level depends on such factors as cost, cable length, and compatibility with the rest of the system. The basic waveforms are illustrated in Figures 5-1 — 5-3. The quasi-sinewave is the solar cell output (Figure 5-1). Both the single channel output and the dual channel output phased in quadrature are available. Dual channel output is necessary for direction sensing. Signal level is typically 40 to 100 millivolts peak to peak into a 2 kilohm load at 40 kHz. The quasi-sinewave output is normally employed if the user desires to save the expense of the internal electronics by performing the signal shaping with electronics located remotely with respect to the encoder. The major disadvantage of the quasi-sinewave output is susceptibility of the low signal level to electrical noise. A zero reference signal, also illustrated in Figure 5-1, is available for position recovery in case of power failure or for a starting reference.

Amplified square wave and pulse outputs, illustrated in Figures 5-2 and 5-3, are available from units with internal electronics. Nominal square wave signal level is 5 volts.

Logic level "1" is 2.4 volts minimum and logic level "0" is 0.4 volt maximum. As with the quasi-sinewave output both single and dual channel outputs are available as well as a shaped zero reference signal. Pulsed output is nominally 5 volts with logic "1" corresponding to 2.4 volts minimum and logic "0" to 0.4 volt maximum. Rise and fall times for the square wave and pulsed outputs is 100 nanosec at no load and up to 1 microsecond into a 1000 picofarad load capacitance. Pulse width measured at 50% of the amplitude is 3 (±1) microsec. As shown in Figure 5-3, pulsed outputs are available in 1, 2, or 4 count logic. The square wave output is compatible with DTL and TTL logic. Also available are 12 and 15 volt units that offer greater noise immunity and are used with high noise immunity logic (HTL and MOS). Characteristics are determined by the user supplied pull-up resistor, Rp, as described in Figure 5-4.

ELECTRICAL INTERFACE

The most frequent problems encountered in transmitting the encoder signal to the receiving electronics are signal distortion and electrical noise. Either problem can result in gain or loss of encoder counts. Imprecise monitoring of the mechanical input is the ultimate result.

Signal Distortion

Signal distortion is illustrated in Figure 5-5. The receiving electronics will respond to an input signal that is either logical "0" (i.e. less than 0.8 volt) or logical "1" (i.e. greater than 2.0 volts). The region between 0.8 and 2.0 volts is logically undefined and the transition through this region must be very rapid (less than about 1 μsec). As the leading edge of the waveform is distorted, the transition time increases. At some point the receiver becomes unstable and encoder counts may be gained or lost.

The primary cause of the distortion is cable length or more specifically cable capacitance. To minimize distortion, high quality cable with capacitance less than 40 picofarads per foot should be used. The longer the cable, the greater the distortion. Beyond some cable length the signal must be "reshaped" before it can be used reliably. Assuming good quality cable is used, Table 5-1 gives rough breakpoints at which this additional processing is required.

No reshaping is required for the quasi-sinewave output since the primary receiver must, by definition, be a signal shaper. The major problem with transmission of low level signals is electrical noise. Severity of the problem increases with transmission distance. Good shielding practice, as described in the following, should be observed.

Square wave distortion is not usually significant for cable lengths less than about 30 feet (capacitance up to about 1000 picofarads). Beyond 30 feet some form of reshaping is required. Between 30 and 80 feet acceptable reshaping can generally be achieved with a differential line receiver or a comparator with hysteresis. These require that the complement of each of the encoder output waveforms (an available DRC option) be supplied to the input of the receiver (Figure 5-6).

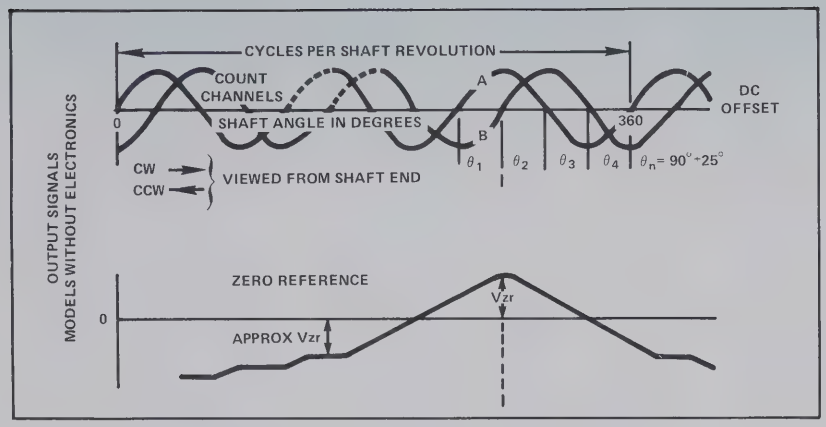

Figure 5-1. Silicon Cell Output

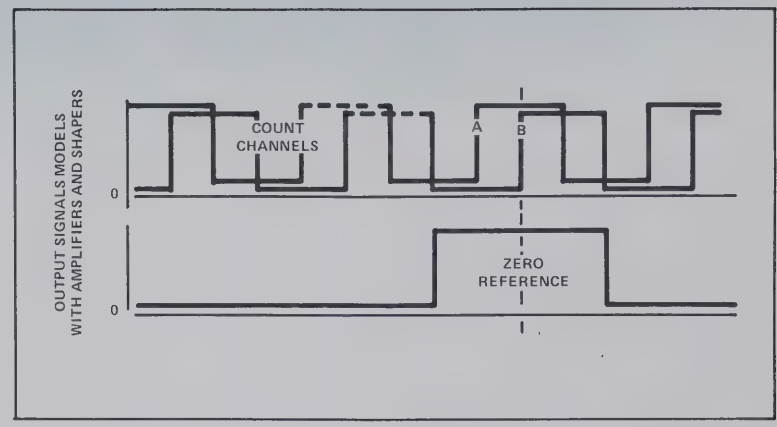

Figure 5-2. Shaped Output

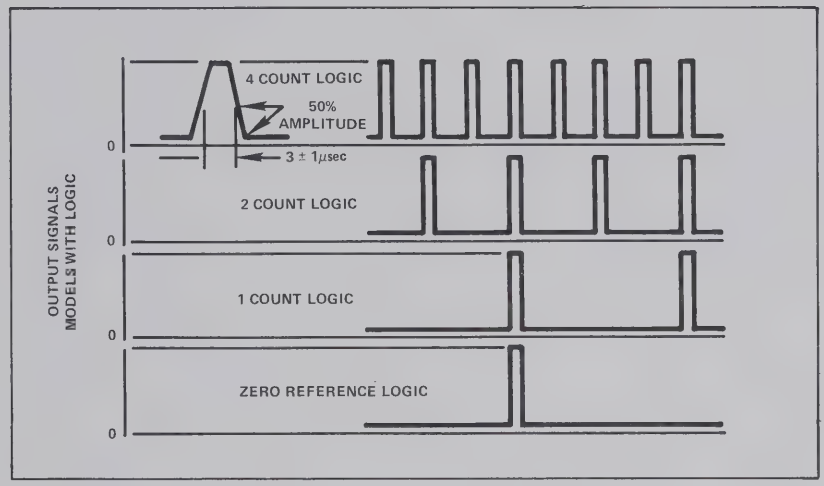

Figure 5-3. Pulse Output

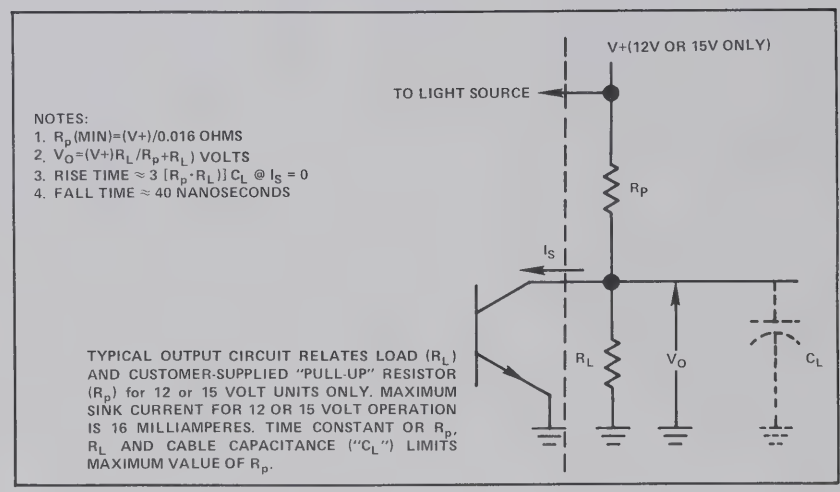

Figure 5-4. High Level Output

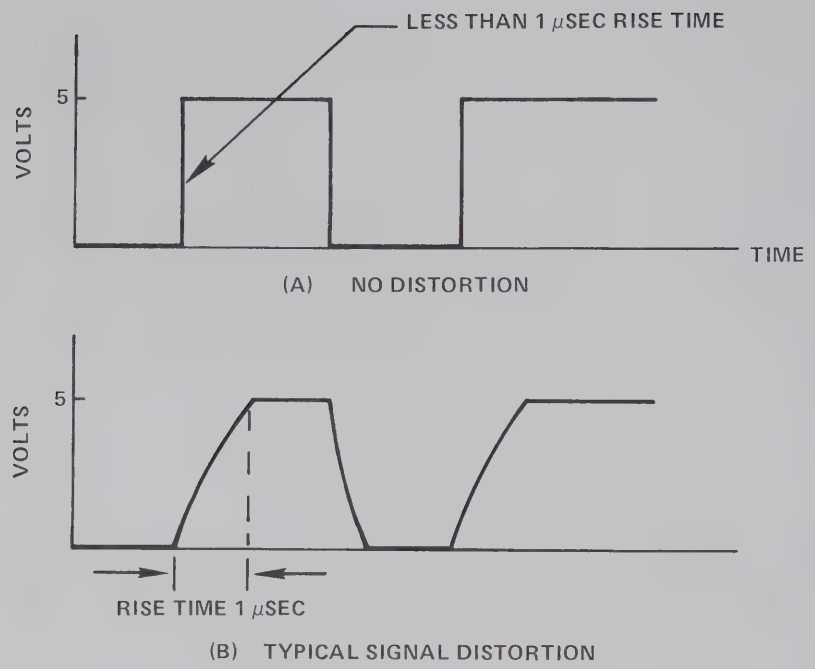

Figure 5-5. Signal Distortion

Table 5-1. Required Signal Conditioning vs. Cable Length

Cable Length	*Waveform*	*Reshaping Required*
any	quasi-sine wave	none
less than 30′	square wave (single ended or complementary)	none
30′ to 80′	square wave (complementary)	use a differential line receiver *or* a comparator with hysteresis
above 80′	square wave (complementary)	use differential line driver at encoder end of cable and differential line receiver at destination
up to 10′	pulse	none
above 10′	PULSE OUTPUT NOT RECOMMENDED	

With square wave output and cable lengths beyond 80 feet a differential line driver should be used at the encoder end of the cable as well as the differential line receiver at the destination.

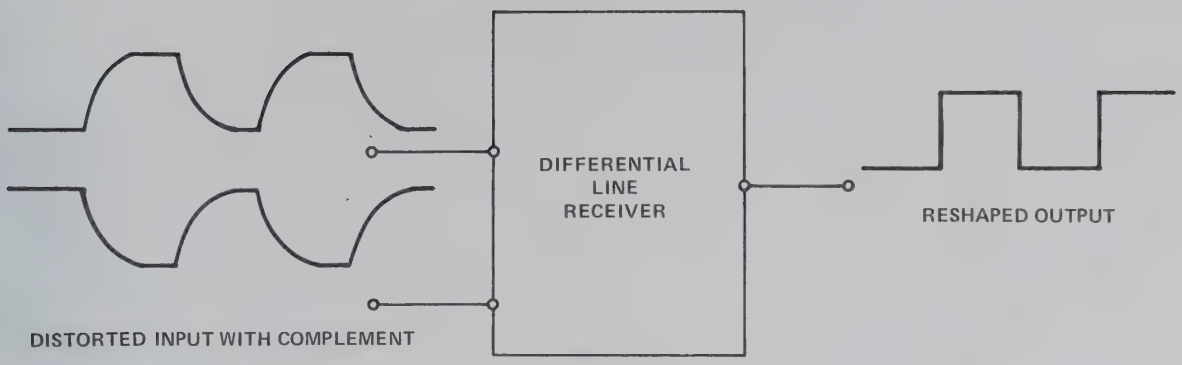

Figure 5-6. Reshaping with the Differential Line Receiver

Pulse output is not recommended for transmission beyond 10 feet. Pulse width is critical and accurate reshaping is not generally feasible.

Frequency response of the electronics can also distort the signal as illustrated in Figure 4-9. DRC encoders can typically be operated to 50 kHz without difficulty.[1] Beyond 50 kHz, factory technical personnel should be consulted to ensure that the encoder components have been properly matched for accurate operation in the desired range. It should be noted that mechanical specifications generally allow rotary encoders to operate up to 3000 rpm continuously and up to 5000 rpm for 10% of the duty cycle. This is solely a mechanical limitation, however, and rpm is more often limited by frequency response except when encoder accuracy is not important (e.g. when NC tooling is being repositioned for the next operation). For example, a 1000 line disk operated at 3000 rpm generates a 50 kHz signal.

$$\left(1000\ \frac{\text{lines}}{\text{rev}} \times 3000\ \frac{\text{rev}}{\text{min}} \times \frac{1}{60\ \frac{\text{sec}}{\text{min}}} \times 1\ \frac{\text{cycle}}{\text{line}}\right)$$

Electrical Noise

The problem of radiated electrical noise, while potentially serious, can generally be overcome with a few simple precautions. Signal cables should always be run in trays isolated from other AC carriers and where possible kept from the vicinity of such noise generators as electric welders and electronic discharge machining equipment.

When it is known that the cable will be exposed to noise, twisted wire pairs, individually shielded, should be used. The shield should be tied to earth ground through the instrument case of the signal destination (Figure 5-7). In severely noisy environments it may

[1] To avoid ambiguity, frequency response is specified as that of a single channel quasi-sinewave output. This should not be confused with frequency of the pulse output which can be 4X greater with 4X logic (i.e. 200 kHz).

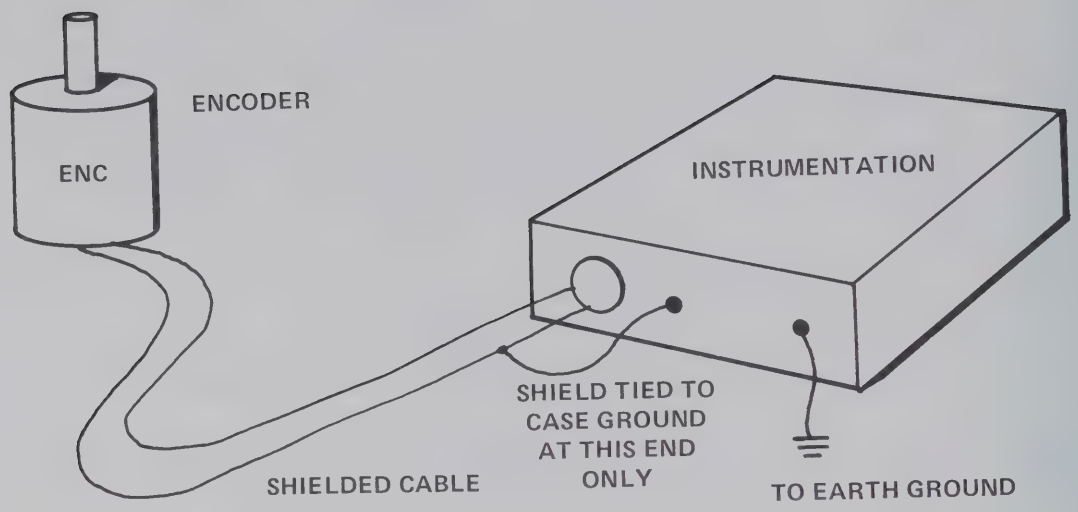

Figure 5-7. Recommended Cable Shield Grounding

be necessary to also tie the *signal* ground to the instrument case through a 0.1 μfarad capacitor.

In addition to radiated noise, encoder operation may be influenced by transients in the encoder's power supply. Encoder power should be regulated to 5 volts ±5%. If load variations are a problem, a line regulating transformer should be used. Noise spikes on the input power can damage both the light source and the encoder electronics. A diode external to the encoder is recommended for protection. In severe environments, a Balun transformer with capacitors may be required. A remote sense power supply is sometimes required to maintain the proper voltage when long signal cables are used and the encoder power supply is located at the signal destination.

ROTARY VERSUS LINEAR ENCODER APPLICATIONS

Whether to monitor linear motion directly with a linear encoder or indirectly by coupling a rotary encoder to a rack and pinion is often a difficult choice. The primary tradeoffs are cost, accuracy, ease of installation, and compatibility with the existing system. The frequent use of the rotary encoder with a precision lead screw that exists for another purpose illustrates the advantage of system compatibility.

The relative cost of the linear encoder and rotary with rack and pinion coupling is illustrated in Figure 5-8. The fixed component of rotary encoder cost is about twice that of the linear, but unit cost of the linear scale exceeds that of rack. Consequently, cost of the two systems becomes the same at spans of about 120 inches. Below 120 inches the linear system costs less.

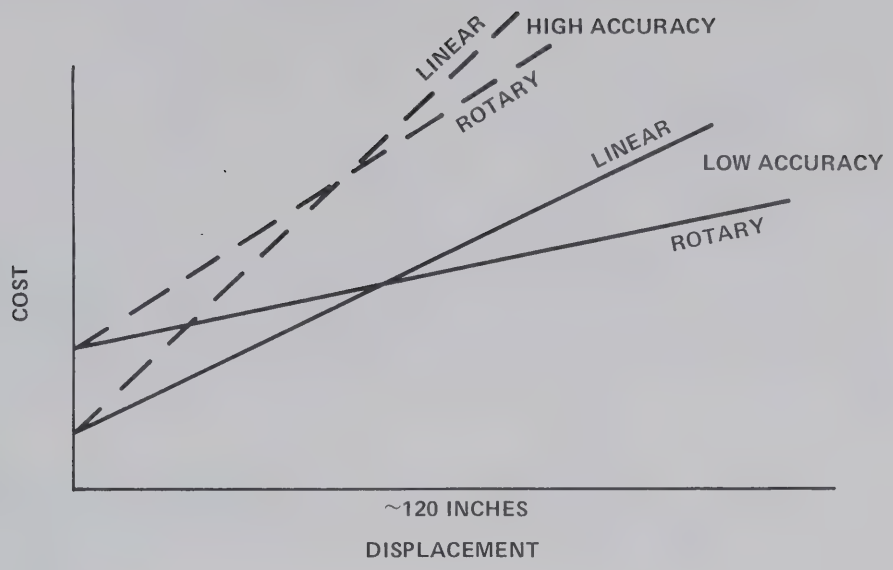

Figure 5-8. Relative Cost of Linear Encoder vs. Rotary with Rack and Pinion

Because racks are manufactured in sections (usually 12 inches) and field assembled to the desired overall length, cumulative error is limited to that of a single section. This is not true of the linear encoder scale. Encoder scale error is directly proportional to scale length. However, because the unit error of encoder scales is less than that of a rack of equivalent cost, the linear encoder is more accurate than the rotary with rack and pinion for spans up to about 4 feet. Between 4 and 8 feet neither system is clearly superior. Beyond 8 feet the rotary with rack and pinion is the more accurate system.

The rack is notoriously difficult to field assemble. Cumulative error must be eliminated at each joint to achieve the rack's potential accuracy, and the individual sections must be carefully aligned to minimize runout. The linear encoder is relatively more simple to install than is the rotary with rack and pinion. This is especially true of enclosed linear encoders as will be illustrated in the following discussion of mechanical interfacing requirements.

MECHANICAL INTERFACE

Both the encoder mount and the mechanical coupling influence encoder accuracy and life. The rotary encoder can be bolted to its support or attached with the standard synchro mount. The latter allows the encoder to be rotated in its mount for precise orientation of the zero reference with respect to the mount. A pilot circle is provided on each case to ensure concentricity of the mount with the encoder shaft.

The most common methods of coupling the mechanical input to the rotary encoder are

- flexible coupling,
- rack and pinion gearing,
- gear to gear, and
- toothed belts.

The primary objective of the coupling is to accurately transmit the input motion to the encoder without subjecting the shaft to excessive loads (as specified for each product). Excess loads will damage the shaft bearings and result in premature failure. In addition to static loads, care must be taken to ensure that momentary or shock loads do not exceed specifications.

The flexible coupling is recommended by DRC because reasonable misalignment can be tolerated without damaging the encoder bearings. The flexible coupling also normally provides the most accurate transmission of the mechanical input. A typical flexible coupling is shown in Figure 5-9.

Figure 5-9. Typical Flexible Coupling

When the rack and opinion (Figure 5-10) is used the encoder should be flexibly mounted to accommodate runout. The rack must also be protected from foreign objects such as metal chips that could subject the encoder shaft to a shock load.

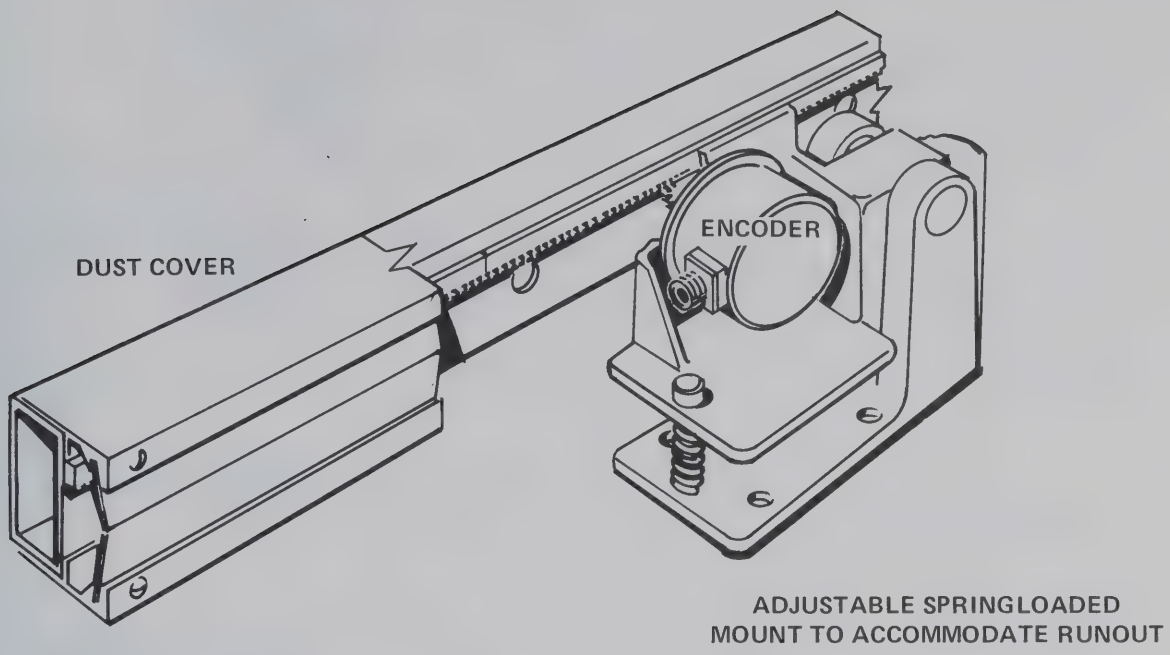

Figure 5-10. Rack and Pinion Spar Assembly

Gear to gear interfaces (Figure 5-11) must be carefully aligned to avoid bottoming the gears or subjecting the encoder shaft to a moment perpendicular to its axis. The same precautions against foreign objects must be observed as for the rack and pinion.

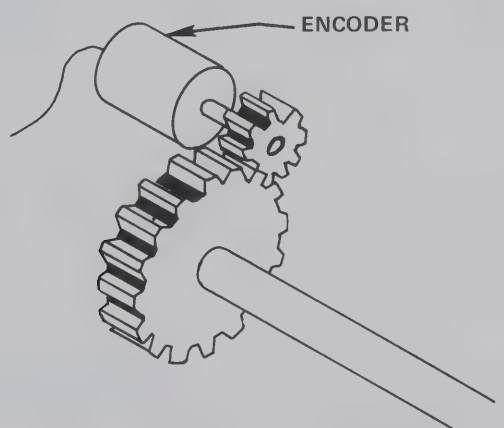

Figure 5-11. Gear to Gear Assembly

Toothed belts are sometimes used but are not recommended because belt whip can subject the encoder shaft to shock loads and belt drives are relatively inaccurate (Figure 5-12).

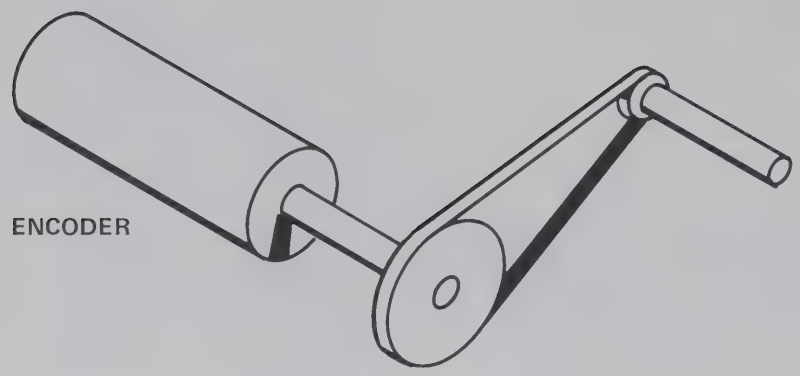

Figure 5-12. Precision Belt Drive

Linear encoders may or may not be enclosed (Figure 5-13) and accuracy depends on system alignment. Mounting the enclosed system is relatively simple. The read head is generally coupled to the mechanical input through a flexure. The unit must be mounted on a reasonably flat surface and the scale aligned parallel with the direction of the input motion.

Greater care is required to mount the unenclosed system. Figure 5-14 illustrates the surfaces that must be aligned. The scale is mounted on surface "C". The read head travels on surfaces "A" and "B". To maintain the fixed gap between the reticle and scale, surfaces "B" and "C" must be held parallel, and surface "A" must be perpendicular to "B". Surface "D" is the top edge of the scale. Parallelism between surfaces "D" and "A" is required to maintain parallelism between the reticle's lines and those on the scale. If the lines are not parallel the light shutter will not properly modulate the light as was illustrated in Section 4. Alignment specifications depend on the particular encoder model and are provided in the installation literature. Typically, the runout between surfaces "B" and "C" must be kept within ±0.002 inch to maintain the reticle to scale tolerance. Deviation from parallel for surfaces "D" and "A" is not so critical. Runout of 1/64" per foot typically produces an encoder error of about 50 microinches per foot.

ENCODER LIFE

Encoder life is most often limited by

- lamp failure,
- shaft bearing failure, or
- an electronics failure.

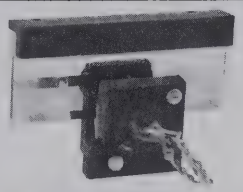

MODEL LMS 106
DISC FILE
APPLICATION FOR SENSING HEAD POSITION.

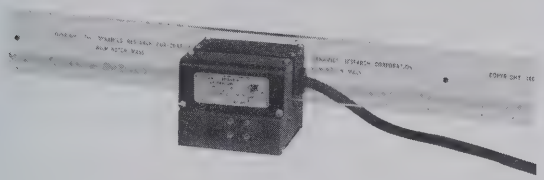

MODEL LMS 50
HIGH PERFORMANCE ENCODER
RESOLUTION 50 MICROINCH (1 MICRON METRIC) INCLUDES HEAD AND SCALE.

MODEL LMS 100
HIGH PERFORMANCE ENCODER
RESOLUTION 100 MICROINCH (2 MICRON METRIC) INCLUDES HEAD AND SCALE.

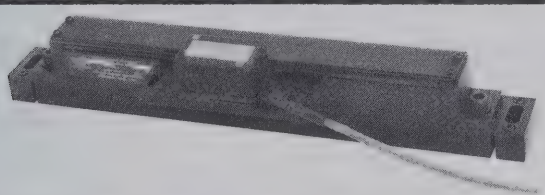

MODEL LMT 100
ENCLOSED 100 MICROINCH ENCODER
RESOLUTION 100 MICROINCH (2 MICRON METRIC) FULLY ENCLOSED HEAD AND SCALE, EASY TO INSTALL.

MODEL LMS 100
HIGH PERFORMANCE ENCODER
WITH ZERO REFERENCE
RESOLUTION 100 MICROINCH (2 MICRON METRIC), ZERO REFERENCE, INCLUDES HEAD AND SCALE.

MODEL LMS 500
HIGH PERFORMANCE ENCODER
RESOLUTION 500 MICROINCH (10 MICRON METRIC) INCLUDES HEAD AND SCALE.

MODEL LMT 500
ENCLOSED 500 MICROINCH ENCODER
RESOLUTION 500 MICROINCH (10 MICRON METRIC) FULLY ENCLOSED HEAD AND SCALE, EASY TO INSTALL.

Figure 5-13. DRC Linear Encoders

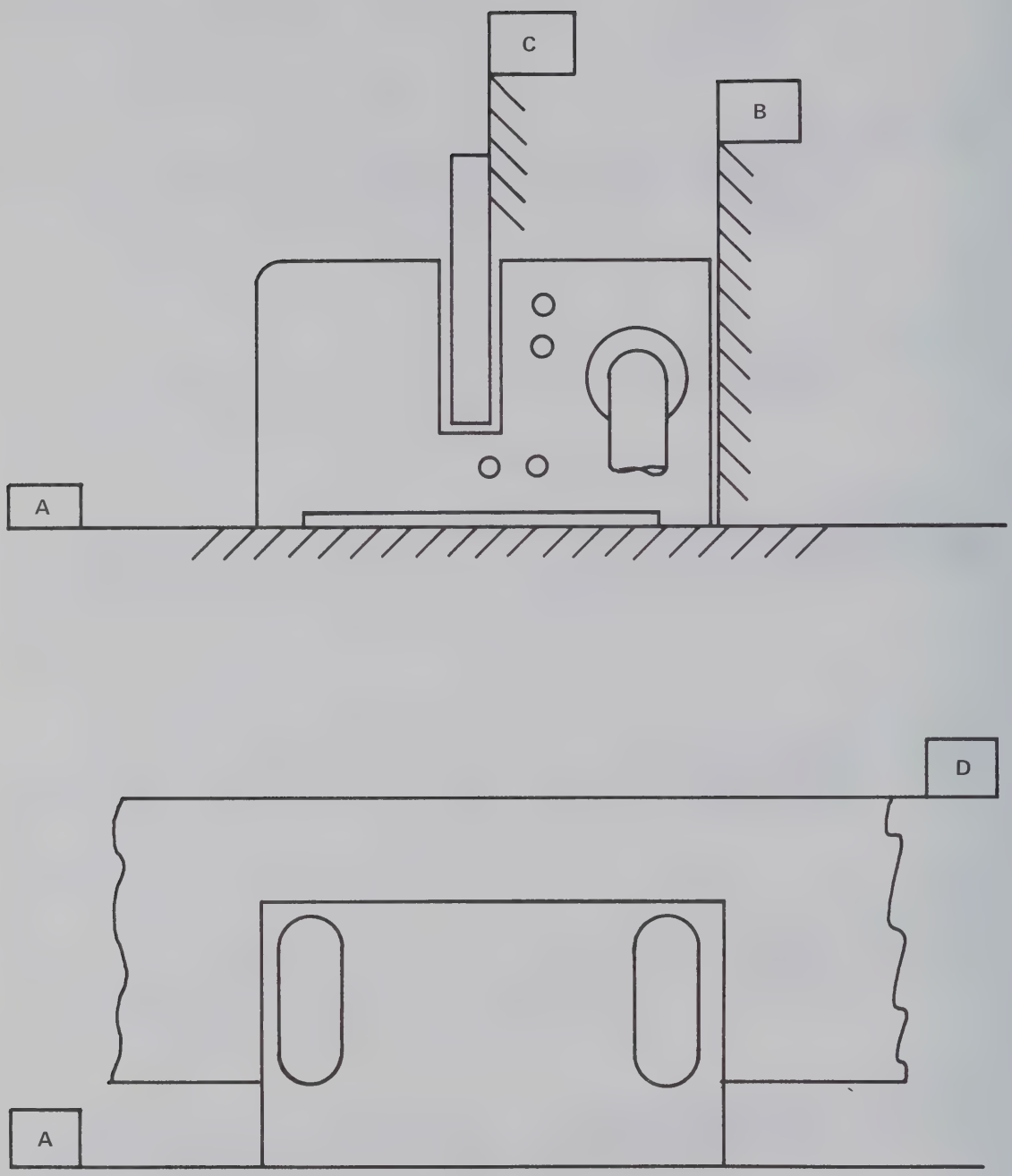

Figure 5-14. Scale and Encoder Mounting Requirements

The ultimate cause of encoder lamp failure is filament evaporation although premature failure can be caused by excessive mechanical vibration. The rate of filament evaporation depends on the operating voltage. The average life, L, of tungsten filament lamps of the type currently used is related to the operating voltage, V, by

$$\frac{L}{L_o} = \left(\frac{V}{V_o}\right)^{-12}$$

L_o and V_o are, respectively, 40,000 hours and 5.0 volts. A small increase in voltage severely limits lamp life.

Assuming constant shaft loading the ultimate cause of bearing failure is wear. The empirical relation between bearing life, L, and the resultant force, F, at the bearing is

$$\frac{L}{L_o} = \left(\frac{F}{F_o}\right)^{-3}$$

when the bearing assembly is preloaded to eliminate clearance. F is the resultant of the preloading forces and the forces required to maintain shaft equilibrium under external loads. Depending on encoder dimensions, F can be significantly greater than the static load applied at the end of the encoder shaft. L_o and F_o are the rated life specifications which vary with encoder type.

Natural failure of encoder electronics is rare and is not a relevant limit to encoder life. However, damage caused by improper troubleshooting or installation practice is far more prevalent. This accounts for the majority of the encoder electronics problems. Most elements of the electronics are current sensitive devices and are destroyed when an excessive or reverse potential is applied. Installation procedures must be carefully followed and DRC technical assistance should be obtained before troubleshooting an encoder failure.

ERROR

While the encoder manufacturer is primarily concerned with encoder error, the encoder user must naturally be concerned with total error. Total error consists of encoder error and the errors caused by interaction of the encoder with the rest of the system.

Encoder error consists of quantization error and instrument error as described in Section 3. Encoder error is largely determined by manufacturing and assembly tolerances and by how well the characteristics of each silicon cell pair are matched. For example, rotary encoder accuracy is typically limited by disk eccentricity. Eccentricity in DRC encoders is less than 0.0002 inch (total indicated runout).

Encoder error is relatively easy to quantify and is usually provided by the manufacturer. However, total error depends on the application and is difficult to quantify. When total system error must be determined it is usually necessary to construct a prototype of the system and conduct tests.

Table 5-2 is a summary of the most frequently encountered sources of error. Items 1, 2, and 3 are sources of encoder error. In pre-assembled encoders these sources are, of course, controlled by the manufacturer. In user assembled encoders care must be taken to maintain the alignment specified by the manufacturer. Otherwise the manufacturer's specification of encoder error will be invalid.

Table 5-2. Potential Sources of Error

1. Manufacturing and Assembly Tolerances
2. Silicon Cell Characteristics
3. Scale or Disk Alignment
4. Regulation of Power Supply
5. Electrical Noise
6. Temperature Variation
7. Mechanical Coupling
8. Mechanical Vibration

In some cases the magnitude of the encoder error caused by misalignment can be estimated. For example, bending of the linear encoder scale, as illustrated in Figure 5-15 introduces an error proportional to the displacement, "d". When d is small relative to S $\{$i.e. $2d/S \approx \sin 2d/S\}$. The concave surface of the scale is shortened by δ and the convex surface is lengthened by δ, where $\delta = 4td/S$

For $S = 12$ inch

$t = 1/4$ inch

$d = 0.0012$

$$\delta = \frac{4 \times 1/4 \times 0.0012}{12} = 0.0001 \text{ inch}$$

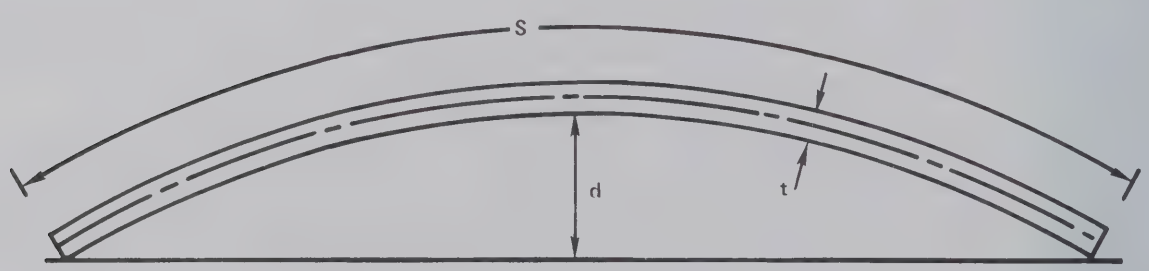

Figure 5-15. Scale Bending Error

In this example, when the lines are on the convex side of the bow, the encoder error will be +0.0001 inch per foot. When the lines are on the concave side the error will be −0.0001 inch per foot.

The requirements for power supply regulation and protection from electrical noise were discussed earlier. Failure to properly regulate the power supply may produce intermittent problems that are difficult to trace. Likewise, the error caused by electrical noise is random and usually difficult to pinpoint.

Temperature influences encoder accuracy in several ways. The light source, if an LED, is strongly temperature sensitive as noted in Section 4. A lamp is not significantly affected by normal operating temperatures (0°F to 120°F) unless operated in a vacuum, which causes higher envelope temperatures and reduces lamp life. Because of the push-pull arrangement silicon cell out-put does not vary significantly with temperature. Below 200 mv, peak to peak, the total change in output between 0°F and 120°F is about 3%.

Dimensional changes with temperature are not compensated. The most significant dimensional change is that of the linear encoder glass scale. The coefficient of expansion for the type used is 4.5×10^{-6} in/in-°F. The error resulting from a ±30°F temperature variation is ±0.0016 in/ft. ($4.5 \times 10^{-6} \times 12 \times 30$). Rotary encoder accuracy is not significantly affected by dimensional changes of the glass disk.

The mechanical coupling can cause errors in two ways. The input motion will not be accurately reproduced at the encoder if the coupling flexes (rotary encoder windup). Also, parallel misalignment of the shafts can cause the encoder shaft not to track the input accurately. These characteristics depend on the type coupling used and are specified by the coupling manufacturer.

Mechanical vibration is a more subtle source of error. Vibration can cause the reticle to scale spacing to fluctuate, or more significantly, can cause the relative velocity between reticle and scale to momentarily exceed the encoder frequency response as the vibration passes through its peak velocity. Any error caused by vibration is normally intolerable.

Mechanical wear and decreasing lamp output contribute to a gradual deterioration of encoder accuracy with age. Mechanical wear increases misalignment. Lower light output accentuates silicon cell mismatch. Cell mismatch produces a periodic error in output pulse spacing and is noncumulative. Wear, however, is a source of cumulative error.

6. APPLICATION NOTES

PHOTOGRAMMETRY

Measurement and control of x-y motion encompasses many encoder applications. Among these is photogrammetry, the precise measurement and interpretation of photographic images. This tool is widely used by government agencies, the military, and many businesses. Typical applications that use aerial photographs are

- Production of Topographical Maps,
- Land Surveying,
- Determining Size and Location of Man Made Structures,
- Agricultural Control,
- Tax Assessment, and
- Land Utilization Studies.

The fundamental task is accurate photographic measurement to deduce the desired distances, elevations, or structural dimensions.

Accuracy, linearity of transducer output over the full displacement, and ease of interfacing with digital systems are important transducer characteristics in these applications. Transducer error must typically be held within $\pm 25\ \mu m$ in the least demanding applications and within $\pm 1\ \mu m$ in the most demanding. Because of the considerable data processing requirements photogrammetry systems are typically designed as either computer peripherals or stand alone units with magnetic tape or disc storage.

Both DRC rotary and linear encoders are used in these applications. The 5 volt square wave output is coupled to a scaled up-down counter. When greatest accuracy is required the LMS 50 linear encoder ($\pm 1\ \mu m$) is used.

The DRC encoder is immune to the problems of drift and nonlinearity and the counter's BCD output is easily interfaced with computers and with stand alone data storage devices.

THE OPTICAL COMPARATOR

Two basic methods are used for dimensional inspection with the optical comparator. When the magnified image of the part to be inspected can be contained within the comparator's screen, the required measurement is made directly from the image on the screen. Accuracy depends on magnification of the image and resolution of the mechanical scale.

When greater accuracy than can be obtained with the above method is required, or when the part is so large that the image will not fit within the comparator's screen, an indexing method is used. The part is attached to a moveable stage and one end of the dimension to be determined is located with a reference mark on the comparator's screen. The stage is then displaced with a micrometer and lead screw arrangement until the other end point of the dimension is aligned with the reference mark on the comparator's screen. The required measurement is the difference of the micrometer readings at the two end points. While this method can be more accurate than the former, it is limited by the scale resolution, or, what is often more significant, the skill required to read a vernier.

By replacing the micrometer readout with a DRC LMS 100 series linear encoder coupled to a digital readout the performance of the optical comparator has been significantly improved (Figure 6-1). The encoder is accurate to 0.0001 in/ft and the digital readout ensures reliable operation by unskilled personnel. Throughput for routine inspection has been increased 100% to 150% and errors have been reduced 25% to 50%.

Another useful feature of the encoder/digital readout in this particular application is DRC's "step/datum" which allows the operator to display at any point the dimension being measured and the total displacement from the reference datum. For example, an inspection requires that dimensions "A", "B", "C", and their sum, "D" be determined (Figure 6-2). Normally, this would require that "A", "B", "C" be manually added or that "D" be determined in a separate measurement. With the "step/datum", this is accomplished automatically as the sum of the readings is accumulated during inspection and can be displayed whenever required.

This arrangement also lends itself to more sophisticated applications such as direct transfer of the data to larger electronic data processing systems or to numerical control of a series of inspections of the same work piece. The 8-4-2-1 BCD output is readily interfaced with both the hardware and software of most EDP systems as well as stand alone devices like magnetic tape recorders and digital printers. Modern comparators are used in manufacturing operations and are consequently subjected to mechanical shock and vibration, temperature variations, and electrical noise. Although supplementary protection is required in the vicinity of severe electrical transients the system has performed reliably and accurately in this application and is cheaper and far simpler than the equivalent system containing resolvers or synchros.

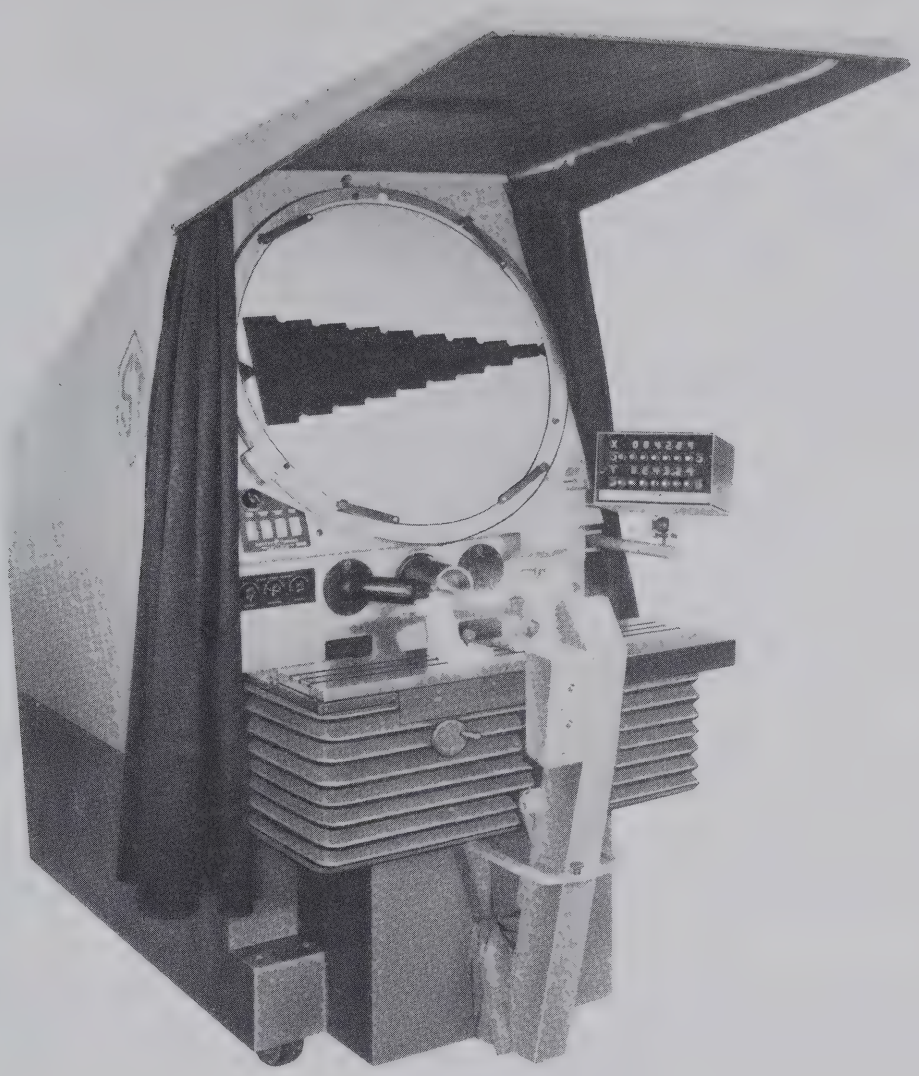

Figure 6-1. Optical Comparator with Digital Readout

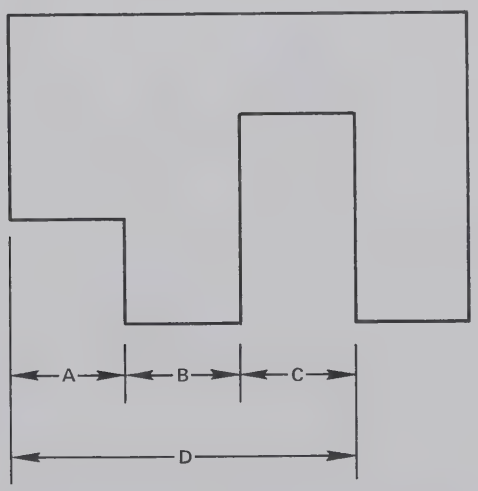

Figure 6-2. Workpiece for Comparator Inspection

INSERTING COMPONENTS IN PRINTED CIRCUIT BOARDS

Manually positioning electronic components for soldering to printed circuit (PC) boards can severely limit production. Computer controlled equipment that rapidly and precisely positions the PC board for insertion of each component can increase production rates 10 to 15 times. This equipment is widely used by high volume PC board manufacturers.

The PC board is typically attached to an x-y table driven by two low inertia motors and precision lead screws. Position is provided by rotary transducers attached to the lead screws. The computer, programmed with the coordinates of each component to be inserted, advances the PC board from point to point. The important characteristics of the position transducer used in this application are noise immunity, accuracy, reliability, low cost, and compatibility with digital equipment. One manufacturer uses the DRC Model 150 rotary encoder with quasi-sinewave output coupled through a differential comparator to an up-down counter (Figure 6-3). The differential comparator provides noise protection and the computer monitors x-y position by interrogating the counter. Linear resolution of the entire system including the encoder is 0.0005 inch.

In applications requiring even greater accuracy the DRC linear encoder is used. Bypassing the lead screw eliminates one source of error.

The relative simplicity of interfacing the encoder with digital systems is the chief advantage over inductive components. Inductive components require expensive A/D conversion and are also less accurate than encoder based systems.

Some equipment manufacturers use step motors to simplify stopping the PC board at a precise x-y coordinate. Although step motors can in theory be operated in an open loop, position feedback is normally employed to compensate for missed steps.

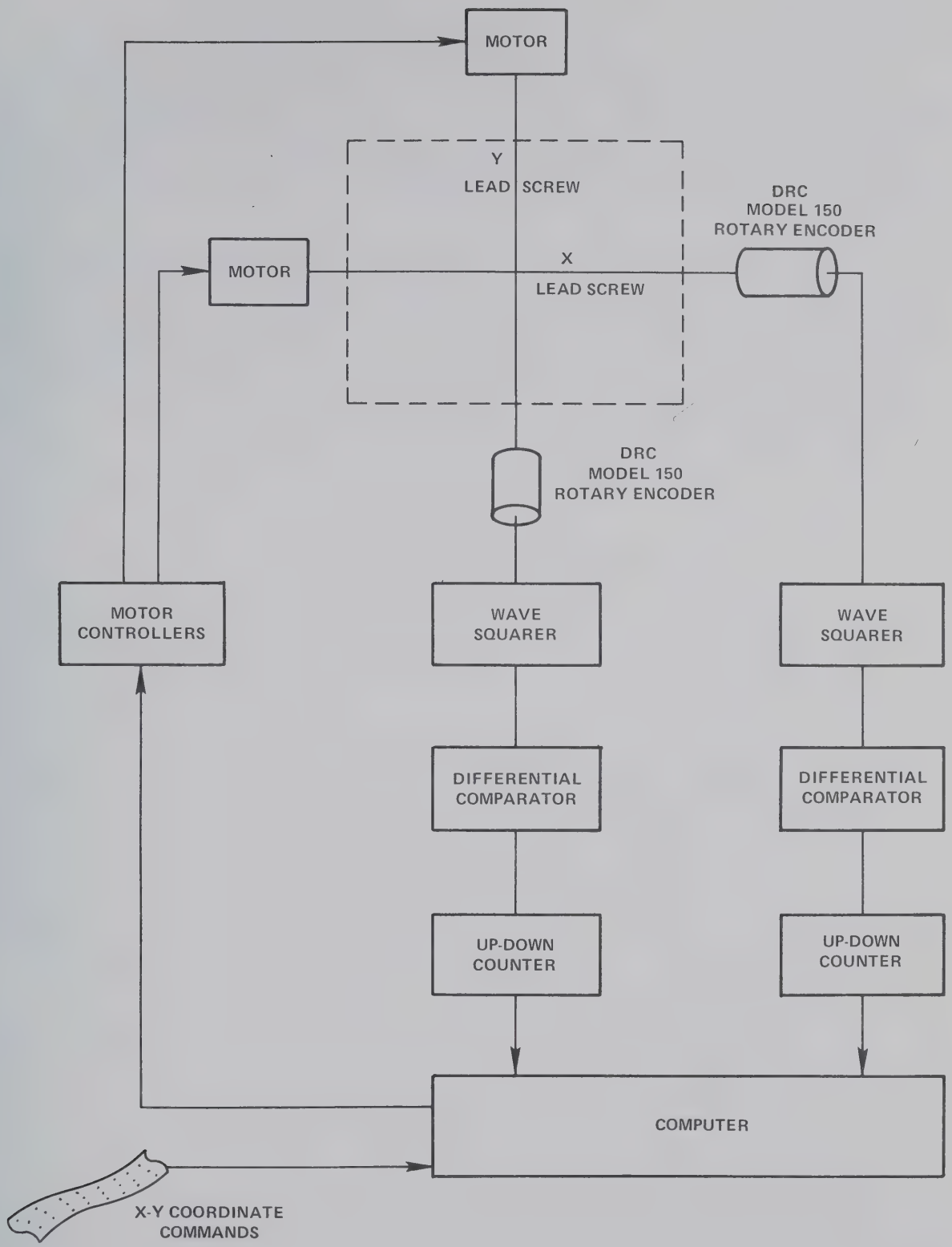

Figure 6-3. X-Y Table for Component Insertion

FABRIC CUTTING

Fabric cutting is an important operation in many industries including manufacture of furniture, automobile headliners and seatcovers, and garments. Historically, fabric cutting has been a labor intensive operation but is being rapidly automated. Unlike other industries such as machine tools, the driving force for automation of fabric cutting is not reduction of labor, but is, rather, the material savings to be achieved through higher accuracy cutting and elimination of errors.

Typical fabric cutting equipment can handle single layers of material or stacks up to 4 inches thick and can traverse areas up to 6 feet wide and 100 feet long. Cutting is performed by a knife blade which is kept aligned with the direction of the cut by rotating the knife about an axis perpendicular to the plane of the fabric (Figure 6-4). A carriage assembly that includes the cutting mechanism, AC drive motors, and control equipment is supported on two sets of round ways (one for "x" movement and one for "y"). Depending on size of the machine the carriage assembly weighs from 200 pounds to one ton.

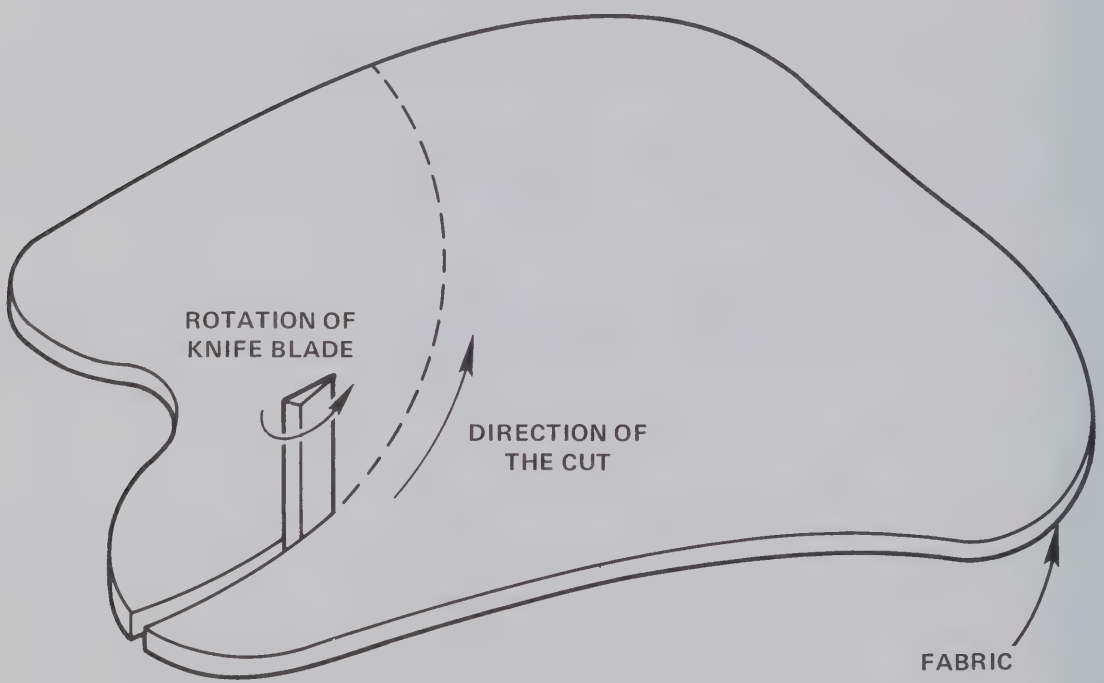

Figure 6-4. Fabric Cutting Blade Alignment

Control is provided by a computer programmed with the x-y coordinates of the pattern to be cut. Three rotary transducers provide position sensing; two for x-y position and one for knife angle. x-y input is coupled to the transducer with rack and pinion drives. The knife is coupled directly to a transducer shaft.

Low cost, reliability, and resistance to dust and severe mechanical vibration are major requirements of the transducer used in this application.

A major manufacturer of fabric cutting equipment uses the DRC Model 39 rotary encoder with 5 volt square-wave output coupled to an up-down counter. Tolerance to mechanical vibration is enhanced with an LED light source in place of the more common tungsten filament lamp. Maximum error of the encoder/rack and pinion assembly is ±0.001 inch per foot and is far within total system error. Overall error of the typical cutting equipment is about ±3/32 inch. Major sources of error are movement of the fabric during the cut and flexure of the thin knife blade.

By using linear encoders or more accurate mechanical coupling, encoder error can be reduced by a factor of 10 where required.

X-RAY ANALYSIS OF TUMORS

Tomography, the study of cross sections of the body, is an important medical diagnostic tool. One modern application of tomography is the computer aided x-ray analysis of tumors. The objectives of tumor analysis are determination of shape, size, and precise location. This information is used for surgical removal of the tumor or for other treatment such as radiation therapy.

Until recently, tumor analysis was performed by fluoroscopy or by a series of x-ray photographs. However, a series of such photographs contains far more information than can be utilized by manual analysis. This problem has been overcome with a computer aided x-ray scanner. The scanner simulates three dimensional images of the tumor that can be mathematically rotated for analysis in any orientation.

One manufacturer produces a machine whose scanner consists of an x-ray source and sensor mounted on a donut shaped ring. The source and detector can be moved about the area of interest until sufficient data have been obtained for modeling the tumor. Mathematical analysis requires the precise position of the x-ray source at every point of the scan.

A DRC Model 77 rotary encoder indicates position of the x-ray source on the donut and an LMT 500 linear encoder indicates the donut's position. The square wave output of each encoder is coupled to an up-down counter. The counters are interrogated by the computer to determine position of the x-ray source. Figure 6-5 is a block diagram of the system.

In all x-ray diagnostic procedures the patient's radiation dose must be minimized. This requires a short scan cycle as well as highly reliable equipment so that repeated scans are unnecessary. The relatively noise free medical environment enhances the basic reliability of the optical incremental encoder. Morover, the encoder's incremental output is easily interfaced with the computer.

Techniques similar to those described in this note are being used in many related applications. The common denominator is a need to track the relative position of a tool, source, sensor, etc.

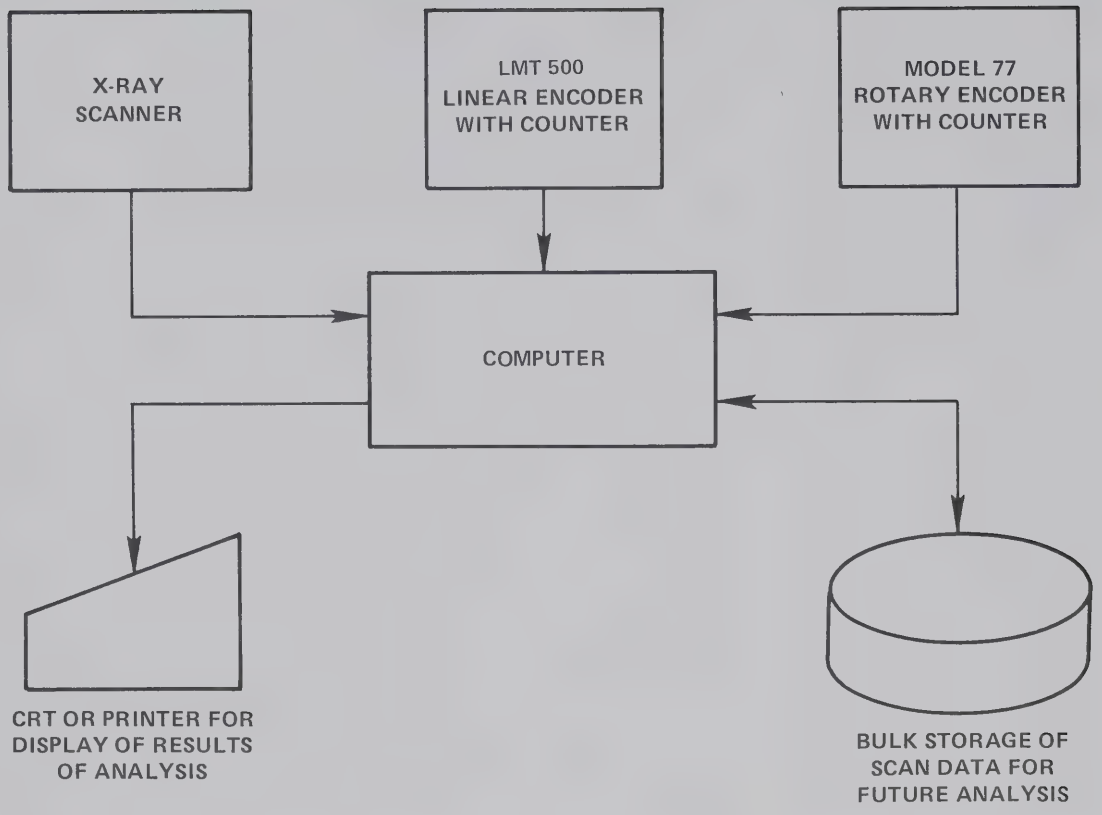

Figure 6-5. Components of System for Computer Aided X-Ray Analysis of Tumors

PHASELOCK SPEED CONTROL OF ELECTRIC MOTORS

Encoders are commonly employed as the feedback element in phaselock control of electric motors. One unusually demanding application is speed control of high performance magnetic tape transports. These transports are designed to process about 200 inches of tape per second with data density of 6250 characters per inch of tape. To maintain error free data transmission the tape speed must be maintained constant within 1%.

In addition to transferring data to and from the tape, the computers which use these transports have other tasks to perform. Consequently, data is normally organized in records of N characters separated by regions of unused tape (Figure 6-6) allowing the tape to be stopped after transfer of any record. Record lengths vary widely depending on the application, but are typically several hundred characters for lower performance transports and easily 15,000 characters for high performance transports. The length of the interrecord gap is determined by the distance required to stop the tape transport's capstan drive mechanism and the distance required to get the tape back to synchronous read/write speed for the next data transfer. Interrecord gaps for the highest performance transports are about 0.3 inch.

One transport design objective is to minimize this gap, both to avoid wasting tape, and more importantly, to maximize data transfer rates when the computer is processing more than one record of data. The start/stop time for the capstan drive depends on the inertia of that mechanism. Consequently, low inertia is an important characteristic of the transducer used to control capstan speed.

A typical application employs the DRC Model TK 720 optical tachometer (Figure 6-7). This tach has a 0.006" thick glass disc with 1000 vacuum deposited metal lines and a specially machined hub. Overall inertia is 0.00001 oz-in-sec^2. The tach is mounted directly on the front end of the capstan drive motor, thus making it an integral motor tach package and eliminating the need for mechanical coupling. As the shaft of the motor rotates, the tach puts out a frequency directly proportional to the speed of rotation. The tach frequency is compared to the reference frequency and an error signal proportional to the frequency difference is generated. This compensates for gross differences between the motor drive reference and the actual motor speed which usually occur during start up or changes in the motor load. Once the frequency difference has been eliminated, the phase difference of the two cycles is compared and the appropriate error signal is generated proportional to motor load. The latter provides fine control of motor speed.

The primary alternative to the optical encoder is an electromagnetic transducer (dc tachometer). The advantages of the optical tach are more precise speed control and low inertia making it an ideal choice in high performance applications. Peak to peak variation of speed with optical tach control is at least 4 times less than with the dc tach. Inertia of the optical system is smaller than that of the dc tach by a factor of 10. The chief disadvantage is cost. The optical tach cost is about twice that of the dc tach.

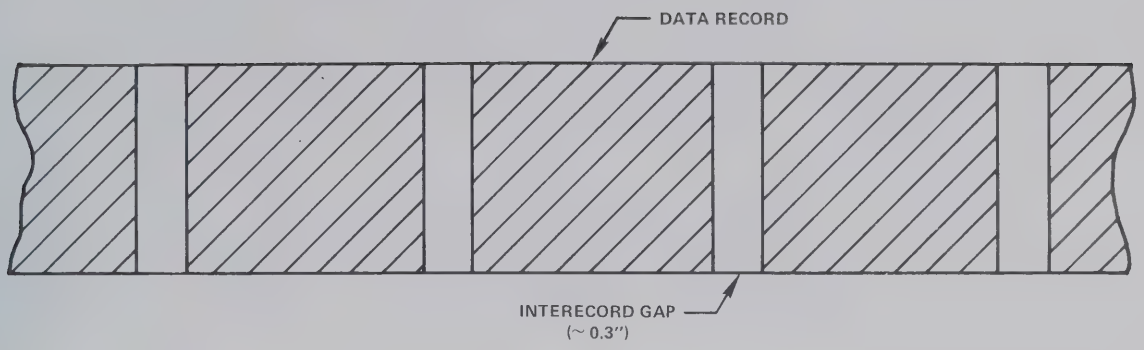

Figure 6-6. Typical Organization of Data on Magnetic Tape

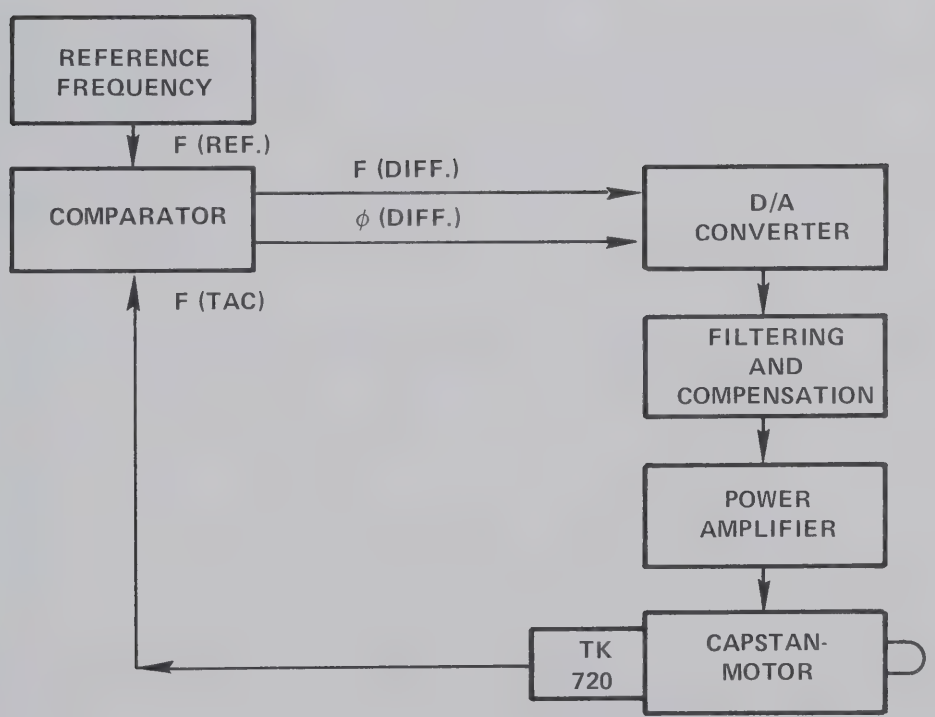

Figure 6-7. Typical Phaselock Servo

MOVING HEAD DISC DRIVE

The moving head disc drive is a computer peripheral used for storage of digital data. The storage medium is a disc that is similar to an LP album coated with a thin layer of metal oxide. Disc drives typically accommodate from one to a dozen such discs. Data are stored on the disc by altering the magnetic state of tiny areas of the oxide layer. To facilitate access, data are organized in circular tracks concentric with the center of the disc. A typical track density is 200 tracks per radial inch.

Data transfer is accomplished with a read/write head (one per disc surface). To access a given region of the disc, the head is first moved radially to the proper track; then the desired region on that track is rotated beneath the head. Because the disc rotates continuously at constant speed, the latter step requires no active command.

Radial position of the read/write head must, however, be monitored. This can be accomplished in several ways. Some disc drives particularly those with many discs dedicate one disc surface for encoding head position data. The primary advantage of this alternative is greater tolerance of temperature changes. Because disc drives are constructed of many dissimilar materials (e.g. glass, plastic, steel, and aluminum) with differing coefficients of thermal expansion, temperature change causes head positioning error. By using a disc and read/write head as a position transducer this error is reduced. Of course, the penalty is one less surface available for data storage.

Other manufacturers couple a position transducer to the read/write heads. Both inductive components and optical encoders are commonly used. One manufacturer currently uses the DRC LMS 106 linear encoder with dual channel quasi-sinewave output as illustrated in Figure 6-8. Because the number of line-space pairs on the active portion of the encoder scale corresponds to the number of tracks on the disc, each positive going zero crossing of one output waveform is used to precisely position the read/write head over the desired track (Figure 6-9). Output of the other channel is used to monitor direction and velocity. Maximum positioning error in the 2 inch head travel is ±0.0001 inch.

The LMS 106 scale weighs just 0.9 oz and is a negligible addition to the inertia of the read/write head's positioning mechanism thus facilitating rapid movement. Moreover, the LMS 106 can be operated up to 100 inches per second.

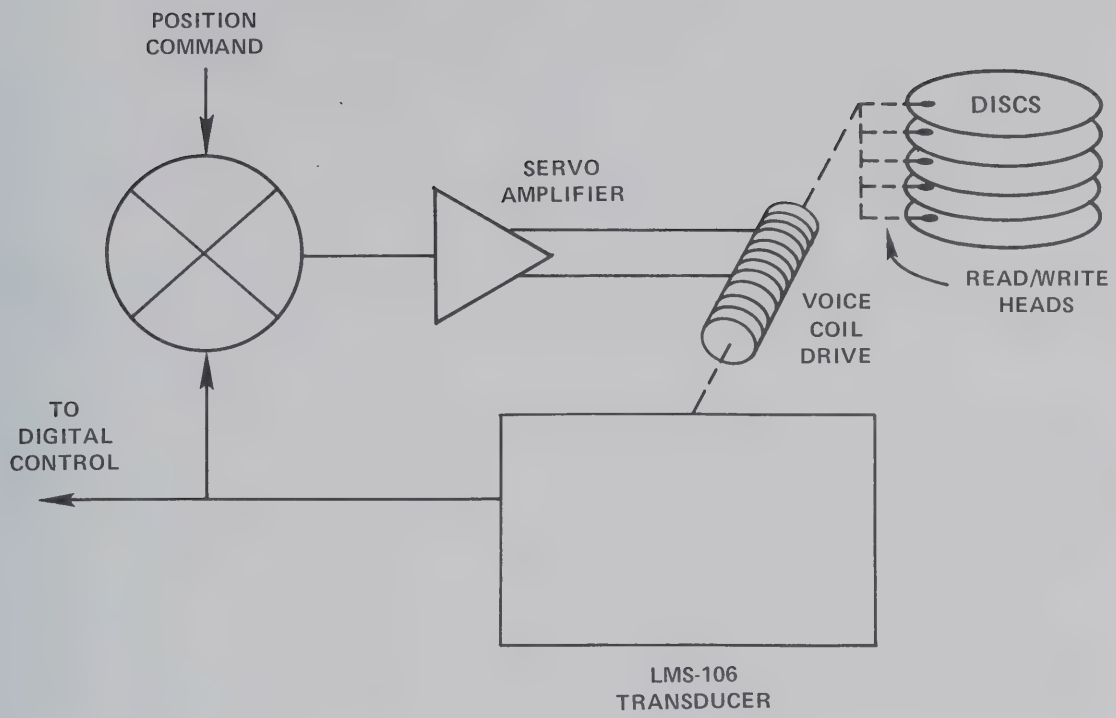

Figure 6-8. Application of Encoder to Determine Read/Write Head Position

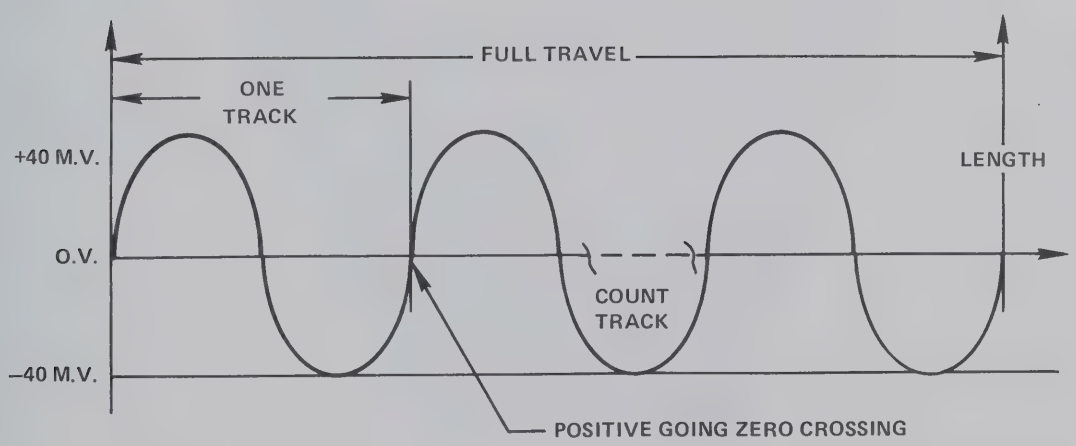

Figure 6-9. Encoder Output Waveform — Single Channel

PHOTOTYPESETTING

Typesetting, when performed manually, requires considerable skill. The two major considerations are

- selecting the proper character of the proper size from the available character set, and
- spacing the characters so that the correct words are formed and so that each line of print is exactly the same length.

The large volume of newsprint and other material produced by modern printers provides impetus to automate this process. Phototypesetting is the most widely used of several automatic typesetting methods and illustrates the diversity of encoder applications.

Figure 6-10 shows the basic components of the phototypesetting system. The available characters are negative silhouettes on a continuously rotating disc (Figure 6-11). The address of each character is a unique angular position of the disc. Type is set by flashing the strobe light when the desired character is positioned over the light source. The projected image of the character is focused on a photosensitive surface by the mirror-lens assembly. Each character's position on the printed line is determined by the position of the mirror-lens arrangement on the lead screw, as illustrated. To print an entire line the control computer determines, from the input text, the characters to be printed and the spacing required to delineate words and maintain constant margins. The mirror-lens assembly is indexed to the start of the new line. The computer then repetitively executes the following until the line is complete.

- Address the desired character on the rotating disc,
- Flash the light at the appropriate time to set the character, and
- Index the mirror-lens assembly to position for setting the next character.

In some phototypesetting equipment the position of the mirror-lens assembly is monitored with a DRC Model TK 701 rotary encoder attached to the drive motor shaft. The chief advantage of the encoder in this application is its low inertia (less than 0.0001 oz-in-sec^2) which facilitates rapid movement of the mirror-lens assembly to each character position. A typical character spacing requires lead screw rotation of about 17 degrees and is accomplished in 0.005 second. Positional accuracy of the typical system is ±1/2 degree of rotation.

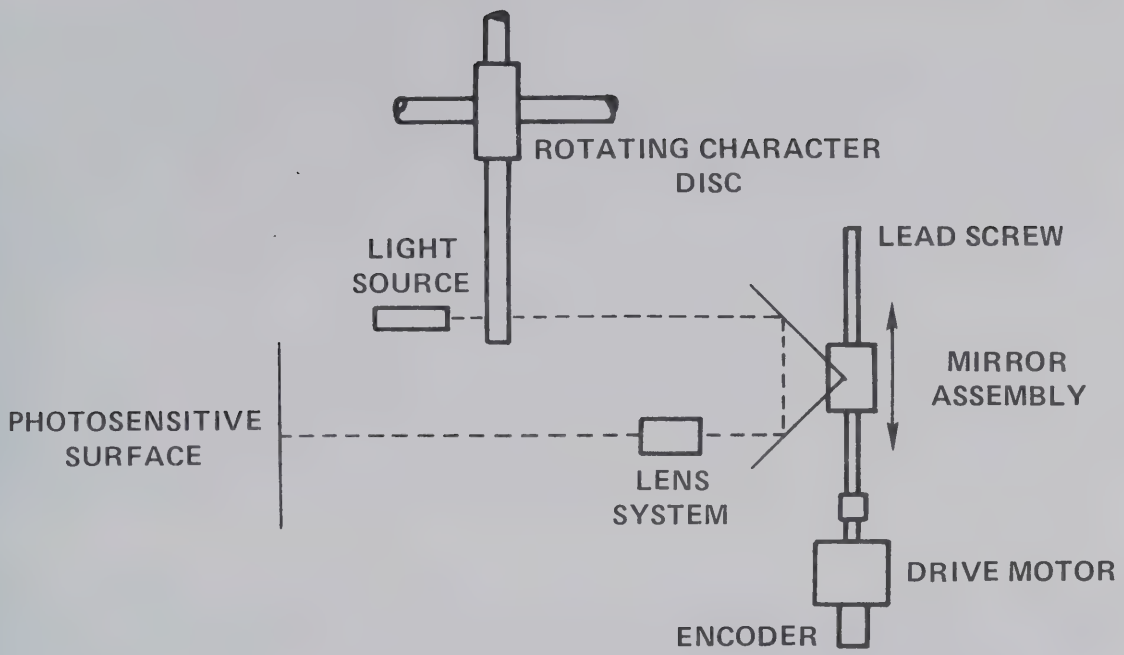

Figure 6-10. Phototypesetter

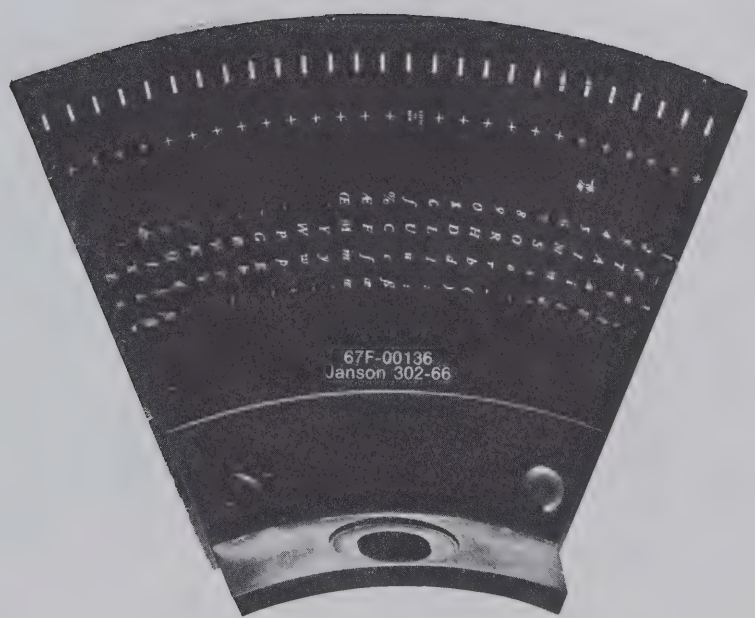

Figure 6-11. Phototypesetting Character Disc

WIRE POSITIONING FOR ULTRASONIC WELD

The encoder can solve a variety of process control problems. One application that is interesting both for its simplicity and for its broad applicability to other similar problems is the positioning of parts in an ultrasonic welding operation. In this automated operation it was required that two wire shaped materials be precisely located end to end for welding inside an ultrasonic coil. (See Figure 6-12.) Part "B" is fastened in a stationary chuck as shown. Part "A" is loaded in a moveable chuck in the retracted position. After loading, part A is displaced a distance D and the ultrasonic welder is started. When the weld is complete, the parts are removed and the cycle is repeated.

When first developed, this operation utilized an adjustable microswitch to indicate the end of travel and to start the weld. However, each time the length, L, of part "A" was changed, the microswitch position had to be manually readjusted. Readjustment of the microswitch for a new length of travel was time consuming and in some cases required trial and error to achieve the required precise positioning of the parts.

DRC's Short Stroke Transducer, a linear optical encoder accurate to 0.0001 inch per foot, coupled to a digital readout with a preset was employed to overcome the problem. With the new system, the operator presets the required displacement in the DRO's rotary switches and activates the translation mechanism. As part "A" moves toward "B" the preset counter is decremented. When the counter reaches zero, a signal identical to that provided by the previously used microswitch is generated by the DRO to automatically stop the translation and to start the ultrasonic weld. When the weld is complete, the parts are removed and the cycle is repeated.

Set up difficulties experienced with the old system were eliminated. To change lengths of wire, the operator simply dials a new displacement in the rotary switches and proceeds without delay. A strong advantage of the encoder in this application was the ability to substitute the system described for the microswitch without need to design accompanying control circuitry. The features described are extendable to a multitude of related applications in which parts being machined or assembled must be precisely located and where set up time is currently a problem.

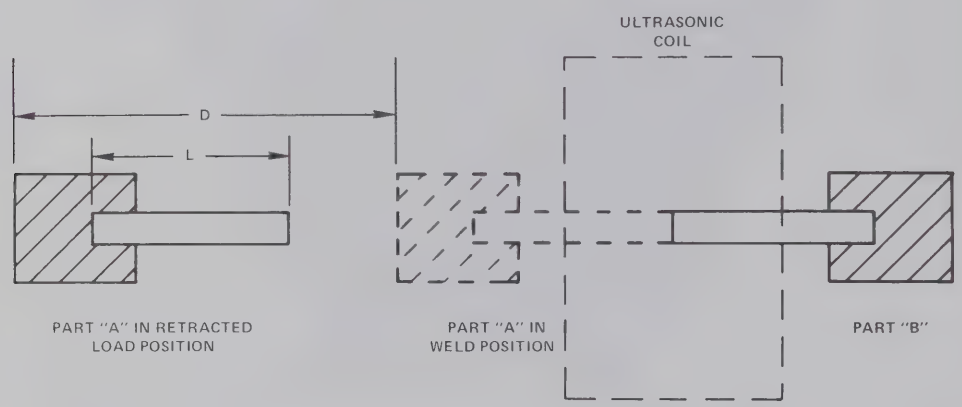

Figure 6-12. Part Positioning for Ultrasonic Welding

SYNCHRONIZATION OF SPINDLE AND TOOL MOVEMENT ON NUMERICALLY CONTROLLED LATHES

Thread machining is a multipass lathe operation. The workpiece is fixed in a chuck and rotated at constant speed (Figure 6-13). The cutting tool engages the workpiece at the beginning of the threadform and is translated parallel to the axis of rotation. When the full thread length has been cut, the tool is retracted, and the spindle and tool movement is reversed to bring the tool to the beginning of the threadform for cutting the second pass. This process is repeated until the required thread depth has been reached.

To avoid cutting multiple threads, the tool must engage the workpiece at the same circumferential position at the start of each pass. The relation between spindle and tool speeds must also be constant. Otherwise thread pitch will vary along the length of the workpiece.

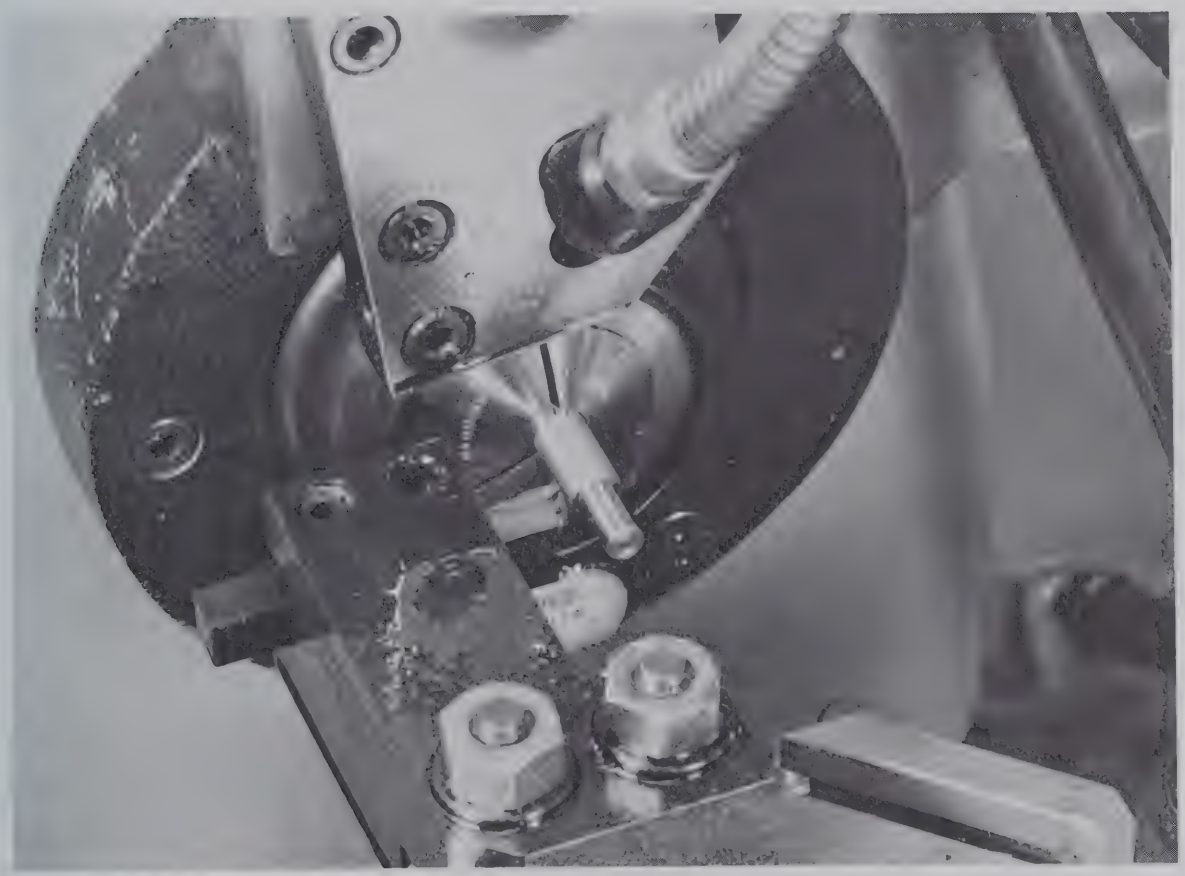

Figure 6-13. Cutting Threads with the NC Lathe

The conventional lathe uses cams and gears to maintain synchronization and control thread pitch. The desired threadform is cut by selecting the proper combination of cams and gears. Skilled operators are required and long term wear of the mechanical parts causes accuracy to deteriorate.

The numerically controlled (NC) lathe achieves synchronization without cams and gears. Having fewer mechanical parts reduces wear and simplifies lathe set-up. Less skill is required to operate the NC lathe than the conventional lathe, and because the multipass operation is completely automatic, the lathe does not have to be constantly tended.

One manufacturer of NC lathes synchronizes spindle and tool movement by equipping the spindle with a DRC Model 29 rotary encoder and using the encoder's 5 volt square-wave output to control tool movement. The ratio of tool to spindle speed is made adjustable with an oscillator as illustrated in Figure 6-14. The oscillator output is a multiple of the input received from the encoder.

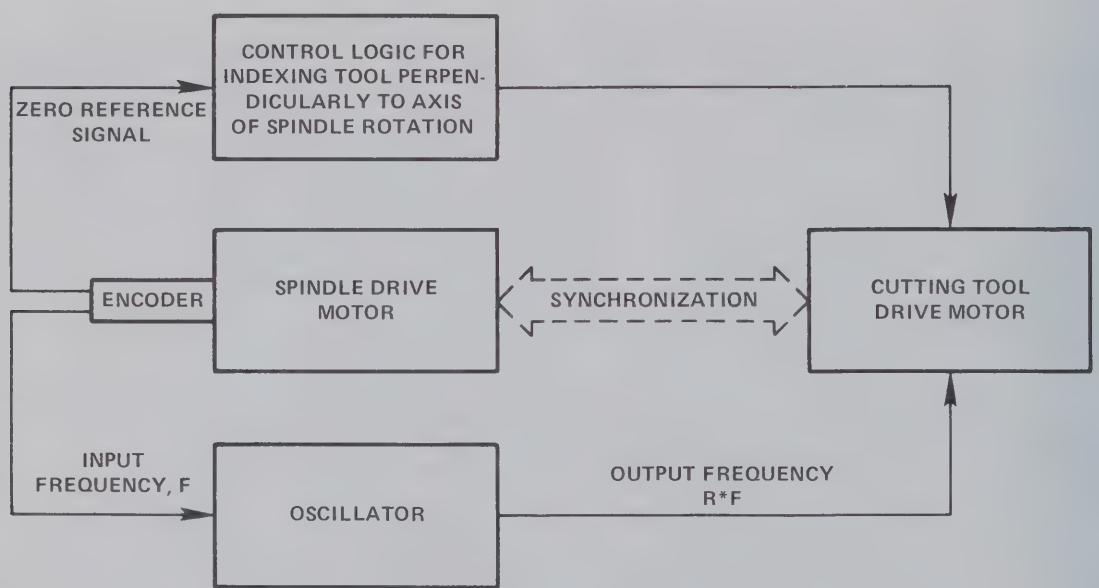

Figure 6-14. Synchronization of Tool and Spindle Drives

The encoder's zero reference signal is used to ensure that the tool engages the workpiece at the same circumferential position at the beginning of each pass. The zero reference signal, illustrated in Figures 5-2, is a pulse generated once per revolution of the encoder shaft.

The DRC Model 29 encoder is ideally suited for this application. It is completely sealed in a compact rugged case that requires no further protection against the cutting lubricants and chips common in machine tool environments. The Model 29 is also characterized by exceptional immunity to the power transients and other sources of electrical noise common in these environments.

NUMERICALLY CONTROLLED BACK GAUGE

Sheet metal shapes like that illustrated in Figure 6-15 are formed with a press brake (Figure 6-16). The corners are formed one at a time by positioning the workpiece between the punch and die and against a back gauge as illustrated in Figure 6-17. To ensure accurate forming the back gauge must be precisely positioned with respect to the die (dimension L). To form N identical parts like that in Figure 6-15 with conventional press brake operation, bend 1 is first formed on all N pieces, then bend 2, etc., until all 8 corners have been formed on the N pieces. Each piece must be handled separately 8 times. Although separate handling is time consuming, it is more efficient than manually readjusting the back gauge after each step.

Besides being inefficient, conventional press brake operation creates material handling problems. Prior to forming, sheet metal can be neatly stacked in a small space. After forming several corners, the parts become unwieldy to stack and require far more space. Yet, they cannot conveniently be removed from the vicinity of the press brake until forming is complete. Some of these limitations have been overcome with the NC back gauge which can be rapidly and accurately moved to programmed positions. This allows the operator to form all required corners on each workpiece before putting that piece aside. Multiple handling is eliminated and the unwieldy parts need not remain in the vicinity of the press brake. Throughput improvement achieved with the NC back gauge depends on the part design and the number of pieces to be formed. Throughput is commonly doubled for runs of 100 to 200 pieces, and for shorter runs of about 10 pieces throughput can easily exceed 5 times that of the conventional press brake. Less skill is required to operate the automated press brake, and by eliminating potential for set-up error, scrap is reduced.

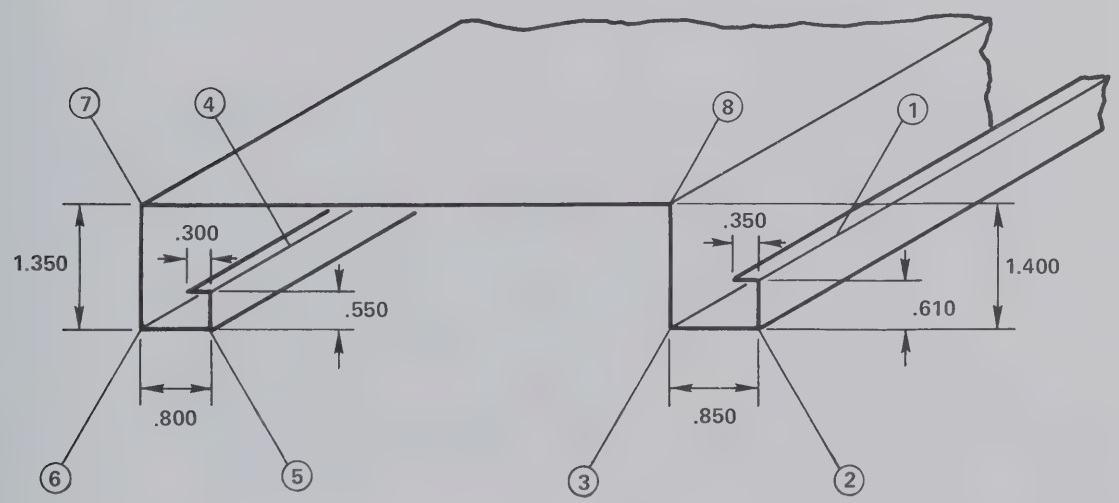

Figure 6-15. Typical Shape Formed with the Press Brake

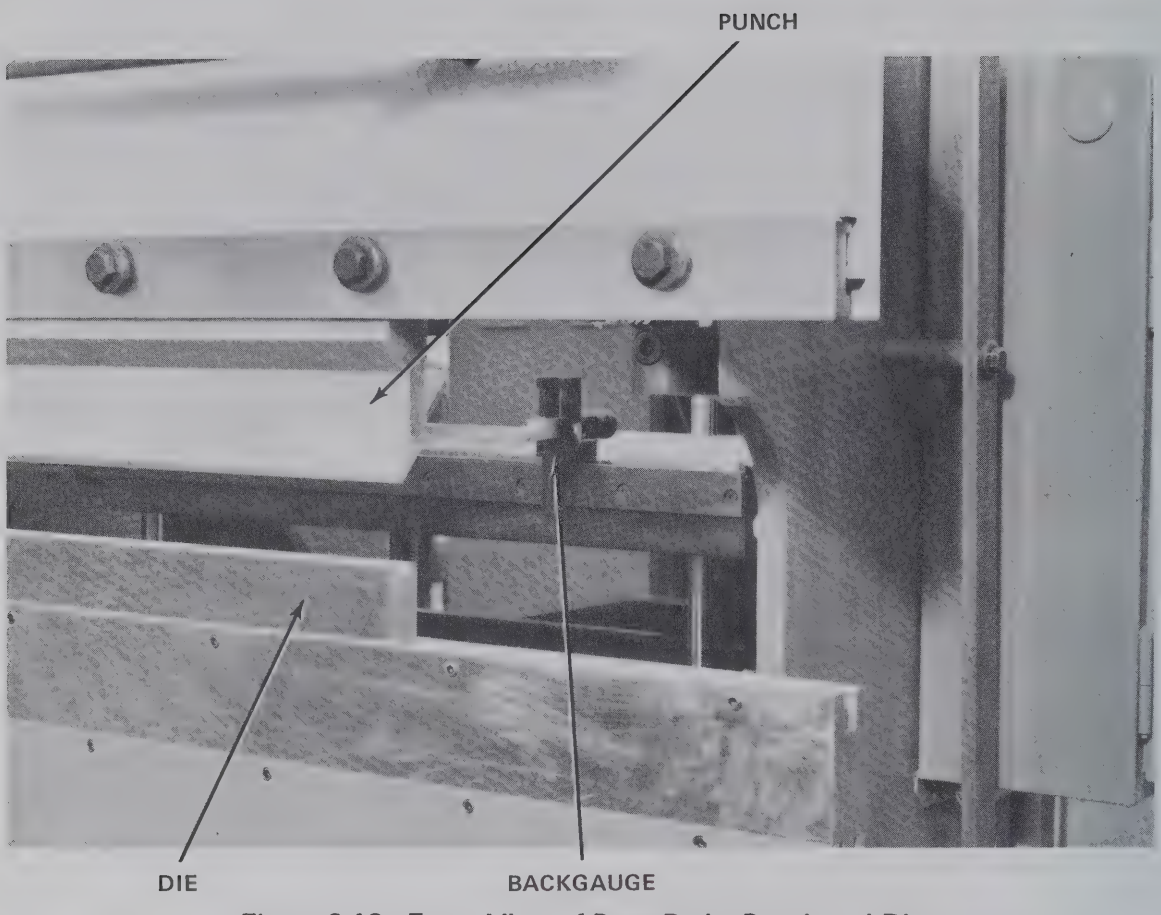

Figure 6-16. Front View of Press Brake Punch and Die

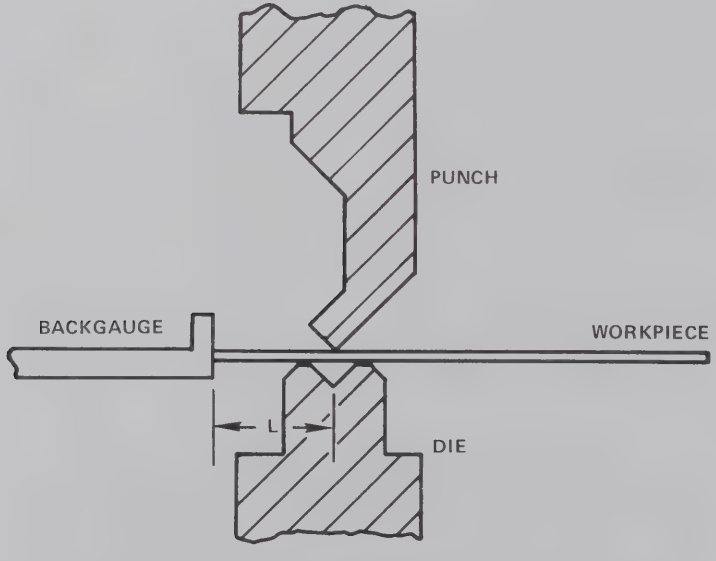

Figure 6-17. Position of Workpiece in Press Brake

Position of the NC back gauge is monitored with both rotary and linear transducers. Inductive components as well as optical encoders are used. As in other digital systems, ease of interfacing is a major advantage of the optical encoder. Whether rotary or linear components are used depends largely on how linear motion is imparted to the back gauge. Rotary components are typically used in systems that employ a precision lead screw. Aside from cost, the major disadvantage of these systems is vulnerability to damage if the back gauge is accidentally driven into a jammed workpiece.

DRC has developed an improved NC back gauge (Figure 6-18). The precision lead screw has been replaced with a hardened steel shaft and a Rohlix® friction drive. Position is monitored with a DRC LMT 025 linear encoder. Because the friction drive can be adjusted to slip at a predetermined load, the DRC system cannot be damaged by driving the back gauge into a jammed workpiece. Cost of the friction drive is less than 20% that of a precision lead screw. Inherent inaccuracy of the friction drive is overcome with the linear encoder. Maximum positioning error of the DRC back gauge is ±0.002 inch.

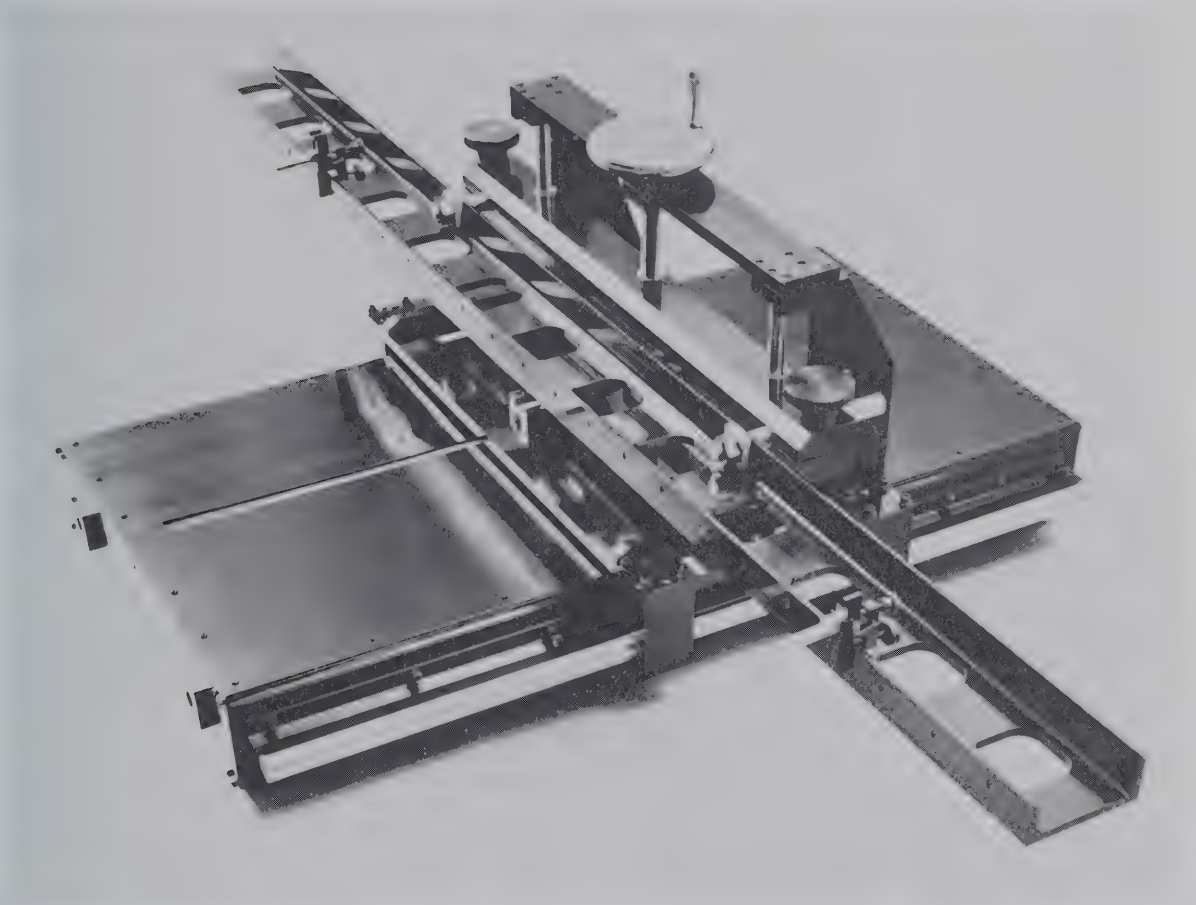

Figure 6-18. DRC Numerically Controlled Back Gauge

7. REFERENCE

SI UNITS AND SYMBOLS

The SI system consists of six base units, two supplementary units, a series of derived units consistent with the base and supplementary units, and a series of approved prefixes for the formation of multiples and submultiples of the various units.

Table 7-1A. SI Units

Base Units:

Quantity	*Unit*	*SI Symbol*	*Formula*
length	meter	m	. . .
mass	kilogram	kg	. . .
time	second	s	. . .
electric current	ampere	A	. . .
thermodynamic temperature	kelvin	K	. . .
luminous intensity	candela	cd	. . .
plane angle	radian	rad	. . .
solid angle	steradian	sr	. . .

Derived Units:

acceleration	meter per second squared	. . .	m/s^2
activity (of a radioactive source)	disintegration per second	. . .	(disintegration/s)
angular acceleration	radian per second squared	. . .	rad/s^2
angular velocity	radian per second	. . .	rad/s
area	square meter	. . .	m^2
density	kilogram per cubic meter	. . .	kg/m^3
electric capacitance	farad	F	A•s/V
electric field strength	volt per meter	. . .	V/m
electric inductance	henry	H	V•s/A
electric potential difference	volt	V	W/A
electric resistance	ohm	Ω	V/A
electromotive force	volt	V	W/A

Table 7-1A. SI Units (Cont.)

Quantity	*Unit*	*SI Symbol*	*Formula*
energy	joule	J	N•m
entropy	joule per kelvin	. . .	J/K
force	newton	N	$kg•m/s^2$
frequency	hertz	Hz	(cycle)/s
illumination	lux	lx	lm/m^2
luminance	candela per square meter	. . .	cd/m^2
luminous flux	lumen	lm	cd•sr
magnetic field strength	ampere per meter	. . .	A/m
magnetic flux	weber	Wb	V•s
magnetic flux density	tesla	T	Wb/m^2
magnetomotive force	ampere	A	. . .
power	watt	W	J/s
pressure	newton per square meter	. . .	N/m^2
quantity of electricity	coulomb	C	A•s
quantity of heat	joule	J	N•m
radiant intensity	watt per steradian	. . .	W/sr
specific heat	joule per kilogram-kelvin	. . .	J/kg•K
stress	newton per square meter	. . .	N/m^2
thermal conductivity	watt per meter-kelvin	. . .	W/m•K
velocity	meter per second	. . .	m/s
viscosity, dynamic	newton-second per square meter	. . .	$N•s/m^2$
viscosity, kinematic	square meter per second	. . .	m^2/s
voltage	volt	V	W/A
volume	cubic meter	. . .	m^3
wavenumber	reciprocal meter	. . .	(wave)/m
work	joule	J	N•m

*The International System of Units was adopted by thirty-six nations, including the U.S., at the 11th General Conference on Weights and Measures in 1960.

Table 7-1B. Multiple and Submultiple Units

Multiplication Factors	*Prefix*	*SI Symbol*
$1\ 000\ 000\ 000\ 000 = 10^{12}$	tera	T
$1\ 000\ 000\ 000 = 10^{9}$	giga	G
$1\ 000\ 000 = 10^{6}$	mega	M
$1\ 000 = 10^{3}$	kilo	k
$100 = 10^{2}$	hecto	h
$10 = 10^{1}$	deka	da
$0.1 = 10^{-1}$	deci	d
$0.01 = 10^{-2}$	centi	c
$0.001 = 10^{-3}$	milli	m
$0.000\ 001 = 10^{-6}$	micro	μ
$0.000\ 000\ 001 = 10^{-9}$	nano	n
$0.000\ 000\ 000\ 001 = 10^{-12}$	pico	p
$0.000\ 000\ 000\ 000\ 001 = 10^{-15}$	femto	f
$0.000\ 000\ 000\ 000\ 000\ 001 = 10^{-18}$	atto	a

Table 7-2. Definition of Basic SI Units

Meter — The meter is the length equal to 1 650 763.73 wavelengths in vacuum of the radiation corresponding to the transition between the levels $2p_{10}$ and $5d_5$ of the krypton-86 atom.

Kilogram — The kilogram is the unit of mass; it is equal to the mass of the international prototype of the kilogram.

Second — The second is the duration of 9 192 631 770 periods of the radiation corresponding to the transition between the two hyperfine levels of the ground state of the cesium-133 atom.

Ampere — The ampere is that constant current which, if maintained in two straight parallel conductors of infinite length, of negligible cross section, and placed one meter apart in vacuum, would produce between these conductors a force equal to 2×10 newton per meter of length.

Kelvin — The kelvin, unit of thermodynamic temperature, is the fraction 1/273.16 of the thermodynamic temperature of the triple point of water.

Candela — The candela is the luminous intensity, in the perpendicular direction, of a surface of 1/600 000 square meter of a blackbody at the temperature of freezing platinum under a pressure of 101 325 newtons per square meter.

Radian — The unit of measure of a plane angle with its vertex at the center of a circle and subtended by an arc equal in length to the radius.

Steradian — The unit of measure of a solid angle with its vertex at the center of a sphere and enclosing an area of the spherical surface equal to that of a square with sides equal in length to the radius.

Table 7-3. Definitions of Derived Units of the International System Having Special Names

Physical Quantity	*Unit and Definition*
Electric capacitance	The *farad* is the capacitance of a capacitor between the plates of which there appears a difference of potential of one volt when it is charged by a quantity of electricity equal to one coulomb.
Electric inductance	The *henry* is the inductance of a closed circuit in which an electromotive force of one volt is produced when the electric current in the circuit varies uniformly at a rate of one ampere per second.

Table 7-3. Definitions of Derived Units of the International System Having Special Names (Cont.)

Physical Quantity	*Unit and Definition*
Electric potential difference (electromotive force)	The *volt* (unit of electric potential difference and electromotive force) is the difference of electric potential between two points of a conductor carrying a constant current of one ampere, when the power dissipated between these points is equal to one watt.
Electric resistance	The *ohm* is the electric resistance between two points of a conductor when a constant difference of potential of one volt, applied between these two points, produces in this conductor a current of one ampere, this conductor not being the source of any electromotive force.
Energy	The *joule* is the work done when the point of application of a force of one newton is displaced a distance of one meter in the direction of the force.
Force	The *newton* is that force which, when applied to a body having a mass of one kilogram gives it an acceleration of one meter per second per second.
Frequency	The *hertz* is a frequency of one cycle per second.
Illumination	The *lux* is the luminous intensity given by a luminous flux of one lumen per square meter.
Luminous flux	The *lumen* is the luminous flux emitted in a solid angle of one steradian by a point source having a uniform intensity of one candela.
Magnetic flux	The *weber* is the magnetic flux which, linking a circuit of one turn, produces in it an electromotive force of one volt as it is reduced to zero at a uniform rate in one second.
Magnetic flux density	The *tesla* is the magnetic flux density given by a magnetic flux of one weber per square meter.
Power	The *watt* is the power which gives rise to the production of energy at the rate of one joule per second.
Quantity of electricity	The *coulomb* is the quantity of electricity transported in one second by a current of one ampere.

Table 7-4. Conversion Factors for Physical Quantities

Alphabetical List of Units
(Symbols of SI units given in parentheses)

To Convert From	*To*	*Multiply By*
abampere	ampere (A)	1.000 000 E + 01
abcoulomb	coulomb (C)	1.000 000 E + 01
abfarad	farad (F)	1.000 000 E + 09
abhenry	henry (H)	1.000 000 E − 09
abmho	mho	1.000 000 E + 09
abohm	ohm (Ω)	1.000 000 E − 09
abvolt	volt (V)	1.000 000 E − 08
acre	meter^2 (m^2)	4.046 856 E + 03
ampere (international of 1948)	ampere (A)	9.998 35 E − 01
angstrom	meter (m)	1.000 000 E − 10
astronomical unit	meter (m)	1.495 98 E + 11
atmosphere (normal)	newton/meter^2 (N/m^2)	1.013 250 E + 05
atmosphere (technical = 1 kgf/cm^2)	newton/meter^2 (N/m^2)	9.806 650 E + 04
bar	newton/meter^2 (N/m^2)	1.000 000 E + 05
barn	meter^2 (m^2)	1.000 000 E − 28
barrel (for petroleum, 42 gal)	meter^3 (m^3)	1.589 873 E − 01
British thermal unit (International Table)	joule (J)	1.055 056 E + 03
British thermal unit (mean)	joule (J)	1.055 87 E + 03
British thermal unit (thermochemical)	joule (J)	1.054 350 E + 03
British thermal unit (39 F)	joule (J)	1.059 67 E + 03
British thermal unit (60 F)	joule (J)	1.054 68 E + 03
bushel (U.S.)	meter^3 (m^3)	3.523 907 E − 02
caliber	meter (m)	2.540 000 E − 04
calorie (International Table)	joule (J)	4.186 800 E + 00
calorie (mean)	joule (J)	4.190 02 E + 00
calorie (thermochemical)	joule (J)	4.184 000 E + 00
calorie (15 C)	joule (J)	4.185 80 E + 00
calorie (20 C)	joule (J)	4.181 90 E + 00
calorie (kilogram, International Table)	joule (J)	4.186 800 E + 03
calorie (kilogram, mean)	joule (J)	4.190 02 E + 03
calorie (kilogram, thermochemical)	joule (J)	4.184 000 E + 03
carat (metric)	kilogram (kg)	2.000 000 E − 04
centimeter of mercury (0 C)	newton/meter^2 (N/m^2)	1.333 22 E + 03
centimeter of water (4 C)	newton/meter^2 (N/m^2)	9.806 38 E + 01
centipoise	newton-second/meter^2 ($N \cdot s/m^2$)	1.000 000 E − 03
circular mil	meter^2 (m^2)	5.067 075 E − 10
clo	kelvin-meter^2/watt ($K \cdot m^2/W$)	2.003 712 E − 01
coulomb (international of 1948)	coulomb (C)	9.998 35 E − 01
cup	meter^3 (m^3)	2.365 882 E − 04
curie	disintegration/second	3.700 000 E + 10
day (mean solar)	second (s)	8.640 000 E + 04
day (sidereal)	second (s)	8.616 409 E + 04
degree (angle)	radian (rad)	1.745 329 E − 02

Table 7-4. Conversion Factors for Physical Quantities (Cont.)

To Convert From	*To*	*Multiply By*
degree Celsius	kelvin (K)	$t_K = t_C + 273.15$
degree Fahrenheit	degree Celsius	$t_C = (t_F - 32)/1.8$
degree Fahrenheit	kelvin (K)	$t_K = (t_F + 459.67)/1.8$
degree Rankine	kelvin (K)	$t_K = t_R/1.8$
decibar	newton/meter^2 (N/m^2)	1.000 000 E + 04
dyne	newton (N)	1.000 000 E − 05
electron volt	joule (J)	1.602 10 E − 19
EMU of capacitance	farad (F)	1.000 000 E + 09
EMU of current	ampere (A)	1.000 000 E + 01
EMU of electric potential	volt (V)	1.000 000 E − 08
EMU of inductance	henry (H)	1.000 000 E − 09
EMU of resistance	ohm (Ω)	1.000 000 E − 09
ESU of capacitance	farad (F)	1.112 6 E − 12
ESU of current	ampere (A)	3.335 6 E − 10
ESU of electric potential	volt (V)	2.997 9 E + 02
ESU of inductance	henry (H)	8.987 6 E + 11
ESU of resistance	ohm (Ω)	8.987 6 E + 11
erg	joule (J)	1.000 000 E − 07
farad (international of 1948)	farad (F)	9.995 05 E − 01
faraday (based on carbon-12)	coulomb (C)	9.648 70 E + 04
faraday (chemical)	coulomb (C)	9.649 57 E + 04
faraday (physical)	coulomb (C)	9.652 19 E + 04
fathom	meter (m)	1.828 800 E + 00
fermi (femtometer)	meter (m)	1.000 000 E − 15
fluid ounce (U.S.)	meter^3 (m^3)	2.957 353 E − 05
foot	meter (m)	3.048 000 E − 01
foot (U.S. survey)	meter (m)	3.048 006 E − 01
foot of water (39.2 F)	newton/meter^2 (N/m^2)	2.988 98 E + 03
footcandle	lumen/meter^2 (lm/m^2)	1.076 391 E + 01
footlambert	candela/meter^2 (cd/m^2)	3.426 259 E + 00
gal (galileo)	meter/second^2 (m/s^2)	1.000 000 E − 02
gallon (Canadian liquid)	meter^3 (m^3)	4.546 122 E − 03
gallon (U.K. liquid)	meter^3 (m^3)	4.546 087 E − 03
gallon (U.S. dry)	meter^3 (m^3)	4.404 884 E − 03
gallon (U.S. liquid)	meter^3 (m^3)	3.785 412 E − 03
gamma	tesla (T)	1.000 000 E − 09
gauss	tesla (T)	1.000 000 E − 04
gilbert	ampere-turn	7.957 747 E − 01
gill (U.K.)	meter^3 (m^3)	1.420 652 E − 04
gill (U.S.)	meter^3 (m^3)	1.182 941 E − 04
grad	degree (angular)	9.000 000 E − 01
grad	radian (rad)	1.570 796 E − 02
grain (1/7000 lbm avoirdupois)	kilogram (kg)	6.479 891 E − 05
gram	kilogram (kg)	1.000 000 E − 03
henry (international of 1948)	henry (H)	1.000 495 E + 00
horsepower (550 ft·lbf/s)	watt (W)	7.456 999 E + 02
horsepower (boiler)	watt (W)	9.809 50 E + 03

Table 7-4. Conversion Factors for Physical Quantities (Cont.)

To Convert From	*To*	*Multiply By*
horsepower (electric)	watt (W)	7.460 000 E + 02
horsepower (metric)	watt (W)	7.354 99 E + 02
horsepower (water)	watt (W)	7.460 43 E + 02
horsepower (U.K.)	watt (W)	7.457 0 E + 02
hour (mean solar)	second (s)	3.600 000 E + 03
hour (sidereal)	second (s)	3.590 170 E + 03
hundredweight (long)	kilogram (kg)	5.080 235 E + 01
hundredweight (short)	kilogram (kg)	4.535 924 E + 01
inch	meter (m)	2.540 000 E − 02
inch of mercury (32 F)	newton/meter^2 (N/m^2)	3.386 389 E + 03
inch of mercury (60 F)	newton/meter^2 (N/m^2)	3.376 85 E + 03
inch of water (39.2 F)	newton/meter^2 (N/m^2)	2.490 82 E + 02
inch of water (60 F)	newton/meter^2 (N/m^2)	2.488 4 E + 02
joule (international of 1948)	joule (J)	1.000 165 E + 00
kayser	1/meter (1/m)	1.000 000 E + 02
kelvin	degree Celsius	$t_C = t_K - 273.15$
kilocalorie (International Table)	joule (J)	4.186 800 E + 03
kilocalorie (mean)	joule (J)	4.190 02 E + 03
kilocalorie (thermochemical)	joule (J)	4.184 000 E + 03
kilogram-force (kgf)	newton (N)	9.806 650 E + 00
kilogram-mass	kilogram (kg)	1.000 000 E + 00
kilopond-force	newton (N)	9.806 650 E + 00
kip	newton (N)	4.448 222 E + 03
knot (international)	meter/second (m/s)	5.144 444 E − 01
lambert	candela/meter^2 (cd/m^2)	$1/\pi$ E + 04
lambert	candela/meter^2 (cd/m^2)	3.183 099 E + 03
langley	joule/meter^2 (J/m^2)	4.184 000 E + 04
light year	meter (m)	9.460 55 E + 15
liter	meter^3 (m^3)	1.000 000 E − 03
lux	lumen/meter^2 (lm/m^2)	1.000 000 E + 00
maxwell	weber (Wb)	1.000 000 E − 08
micron	meter (m)	1.000 000 E − 06
mil	meter (m)	2.540 000 E − 05
mile (international nautical)	meter (m)	1.852 000 E + 03
mile (U.K. nautical)	meter (m)	1.853 184 E + 03
mile (U.S. nautical)	meter (m)	1.852 000 E + 03
mile (U.S. statute)	meter (m)	1.609 344 E + 03
millibar	newton/meter^2 (N/m^2)	1.000 000 E + 02
millimeter of mercury (0 C)	newton/meter^2 (N/m^2)	1.333 224 E + 02
minute (angle)	radian (rad)	2.908 882 E − 04
minute (mean solar)	second (s)	6.000 000 E + 01
minute (sidereal)	second (s)	5.983 617 E + 01
moment of inertia (lbm·ft^2)	kilogram-meter^2 (kg·m^2)	4.214 012 E − 02
moment of inertia (lbm·in^2)	kilogram-meter^2 (kg·m^2)	2.926 397 E − 05
moment of section (second moment of area) (foot^4)	meter^4 (m^4)	8.630 975 E − 03

Table 7-4. Conversion Factors for Physical Quantities (Cont.)

To Convert From	*To*	*Multiply By*
moment of section (second moment of area) (inch^4)	meter^4 (m^4)	4.162 314 E – 07
month (mean calendar)	second (s)	2.628 000 E + 06
oersted	ampere/meter (A/m)	7.957 747 E + 01
ohm (international of 1948)	ohm (Ω)	1.000 495 E + 00
ounce-force (avoirdupois)	newton (N)	2.780 139 E – 01
ounce-mass (avoirdupois)	kilogram (kg)	2.834 952 E – 02
ounce-mass (troy or apothecary)	kilogram (kg)	3.110 348 E – 02
ounce (U.S. fluid)	meter^3 (m^3)	2.957 353 E – 05
parsec	meter (m)	3.083 74 E + 16
pascal	newton/meter^2 (N/m^2)	1.000 000 E + 00
peck (U.S.)	meter^3 (m^3)	8.809 768 E – 03
pennyweight	kilogram (kg)	1.555 174 E – 03
perm (0 C)	kilogram/newton-second (kg/N•s)	5.721 35 E – 11
perm (23 C)	kilogram/newton-second (kg/N•s)	5.745 25 E – 11
perm-inch (0 C)	kilogram-meter/newton-second (kg•m/N•s)	1.453 22 E – 12
perm-inch (23 C)	kilogram-meter/newton-second (kg•m/N•s)	1.459 29 E – 12
phot	lumen/meter^2 (lm/m^2)	1.000 000 E + 04
pica (printer's)	meter (m)	4.217 518 E – 03
pint (U.S. dry)	meter^3 (m^3)	5.506 105 E – 04
pint (U.S. liquid)	meter^3 (m^3)	4.731 765 E – 04
point (printer's)	meter	3.514 598 E – 04
poise (absolute viscosity)	newton-second/meter^2 ($N•s/m^2$)	1.000 000 E – 01
poundal	newton (N)	1.382 550 E – 01
pound-force (lbf avoirdupois)	newton (N)	4.448 222 E + 00
pound-mass (lbm avoirdupois)	kilogram (kg)	4.535 924 E – 01
pound-mass (troy or apothecary)	kilogram (kg)	3.732 417 E – 01
quart (U.S. dry)	meter^3 (m^3)	1.101 221 E – 03
quart (U.S. liquid)	meter^3 (m^3)	9.463 529 E – 04
rad (radiation dose absorbed)	joule/kilogram (J/kg)	1.000 000 E – 02
rhe	meter^2/newton-second (m^2/N•s)	1.000 000 E + 01
rod	meter (m)	5.029 200 E + 00
roentgen	coulomb/kilogram (C/kg)	2.579 760 E – 04
second (angle)	radian (rad)	4.848 137 E – 06
second (sidereal)	second (s)	9.972 696 E – 01
section	meter^2 (m^2)	2.589 988 E + 06
section modulus (foot^3)	meter^3 (m^3)	2.831 685 E – 02
section modulus (inch^3)	meter^3 (m^3)	1.638 706 E – 05
shake	second (s)	1.000 000 E – 08
slug	kilogram (kg)	1.459 390 E + 01
statampere	ampere (A)	3.335 640 E – 10
statcoulomb	coulomb (C)	3.335 640 E – 10
statfarad	farad (F)	1.112 650 E – 12
stathenry	henry (H)	8.987 554 E + 11
statmho	mho[6]	1.112 650 E – 12

Table 7-4. Conversion Factors for Physical Quantities (Cont.)

To Convert From	*To*	*Multiply By*
statohm	ohm (Ω)	8.987 554 E + 11
statute mile (U.S.)	meter (m)	1.609 344 E + 03
statvolt	volt (V)	2.997 925 E + 02
stere	meter^3 (m^3)	1.000 000 E + 00
stilb	candela/meter^2 (cd/m^2)	1.000 000 E + 04
stoke (kinematic viscosity)	meter^2/second (m^2/s)	1.000 000 E – 04
tablespoon	meter^3 (m^3)	1.478 676 E – 05
teaspoon	meter^3 (m^3)	4.928 922 E – 06
tex	kilogram/meter (kg/m)	1.000 000 E – 06
ton (assay)	kilogram (kg)	2.916 667 E – 02
ton (long, 2240 lbm)	kilogram (kg)	1.016 047 E + 03
ton (metric)	kilogram (kg)	1.000 000 E + 03
ton (nuclear equivalent of TNT)	joule (J)	4.20 E + 09
ton (register)	meter^3 (m^3)	2.831 685 E + 00
ton (short, 2000 lbm)	kilogram (kg)	9.071 847 E + 02
tonne	kilogram (kg)	1.000 000 E + 03
torr (mm Hg, 0 C)	newton/meter^2 (N/m^2)	1.333 22 E + 02
township	meter^2 (m^2)	9.323 957 E + 07
unit pole	weber (Wb)	1.256 637 E – 07
volt (international of 1948)	volt (absolute) (V)	1.000 330 E + 00
watt (international of 1948)	watt (W)	1.000 165 E + 00
yard	meter (m)	9.144 000 E – 01
year (calendar)	second (s)	3.153 600 E + 07
year (sidereal)	second (s)	3.155 815 E + 07
year (tropical)	second (s)	3.155 693 E + 07

Table 7-5. Conversion Factors for Servo Calculations

To Convert From	*To*	*Multiply By*
Length		
inches	cm	2.540
feet	cm	30.48
cm	inches	0.3937
feet	inches	12.
cm	feet	3.281×10^{-2}
inches	feet	8.333×10^{-2}
Mass		
oz	gm	28.35
lb	gm	453.6
slug	gm	1.459×10^{4}
gm	oz	3.527×10^{-2}
lb	oz	16.

Table 7-5. Conversion Factors for Servo Calculations (Cont.)

To Convert From	*To*	*Multiply By*
slug	oz	514.7
gm	lb	2.205×10^{-3}
oz	lb	6.250×10^{-2}
slug	lb	32.17
gm	slug	6.853×10^{-5}
oz	slug	1.943×10^{-3}
lb	slug	3.108×10^{-2}

*1 slug mass goes at 1 ft/sec^2 when acted upon by 1 lb force.

Force

*gm	dyne	980.7
oz	dyne	2.780×10^{4}
lb	dyne	4.448×10^{5}
dyne	*gm	1.020×10^{-3}
dyne	oz	3.597×10^{-5}
dyne	lb	2.248×10^{-6}

*Used as force units.

Torque

gm cm	dyne cm	980.7
oz in	dyne cm	7.062×10^{4}
lb ft	dyne cm	1.356×10^{7}
dyne cm	gm cm	1.020×10^{-3}
oz in	gm cm	72.01
lb ft	gm cm	1.383×10^{4}
dyne cm	oz in	1.416×10^{-5}
gm cm	oz in	1.389×10^{-2}
lb ft	oz in	192.0
dyne cm	lb ft	7.376×10^{-8}
gm cm	lb ft	7.233×10^{-5}
oz in	lb ft	5.208×10^{-3}

Torque to Inertia Ratio, or Acceleration at Stall. (Stall torque divided by rotor inertia.)

oz in/gm cm^2	rad/sec^2	7.062×10^{4}
oz in/oz in^2	rad/sec^2	386.1

Rotation

rpm	degrees/sec	6.
rad/sec	degrees/sec	57.30
degrees/sec	rpm	0.1667
rad/sec	rpm	9.549

Table 7-5. Conversion Factors for Servo Calculations (Cont.)

To Convert From	*To*	*Multiply By*
degrees/sec	rad/sec	1.745×10^{-2}
rpm	rad/sec	0.1047
Moment of Inertia		
oz in^2	gm cm^2	182.9
lb ft^2	gm cm^2	4.214×10^{5}
slug ft^2	gm cm^2	1.356×10^{7}
gm cm^2	oz in^2	5.467×10^{-3}
lb ft^2	oz in^2	2.304×10^{3}
slug ft^2	oz in^2	7.412×10^{4}
gm cm^2	lb ft^2	2.373×10^{-6}
oz in^2	lb ft^2	4.340×10^{-4}
slug ft^2	lb ft^2	32.17
gm cm^2	slug ft^2	7.376×10^{-8}
oz in^2	slug ft^2	1.349×10^{-5}
lb ft^2	slug ft^2	3.108×10^{-2}
in oz sec^2	oz in^2	3.86×10^{2}
oz in^2	in oz sec^2	2.58×10^{-3}
Power		
(oz in) (deg/sec)	h.p.	1.653×10^{-7}
(oz in) (rpm)	h.p.	9.917×10^{-7}
(lb ft) (deg/sec)	h.p.	3.173×10^{-5}
(lb ft) (rpm)	h.p.	1.904×10^{-4}
watts	h.p.	1.341×10^{-3}
(oz in) (deg/sec)	watts	1.232×10^{-4}
(oz in) (rpm)	watts	7.395×10^{-4}
(lb ft) (deg/sec)	watts	2.366×10^{-2}
(lb ft) (rpm)	watts	0.1420
h.p.	watts	745.7
Damping Coefficient of 2 Phase Motor. (Stall torque divided by top motor speed.)		
oz in/rpm	lb ft/rad sec^{-1}	4.974×10^{-2}
oz in/rpm	dyne cm/rad sec^{-1}	6.743×10^{5}
Time Constant of 2 Phase Motor. (Rotor inertia divided by motor damping coefficient.)		
gm cm^2 X rpm oz in	sec	1.483×10^{-6}
gm cm^2 X rpm oz in	sec	2.712×10^{-4}
Loop Gain. (Also called stiffness, sensitivity, torque gradient.)		
oz in/degree	lb ft/rad	0.2984
oz in/degree	dyne cm/rad	4.046×10^{6}

Table 7-6. Angular Resolution Table

N (bits)	*Counts per Revolution*	*Angular Resolution*	
		Deg. Min., Sec.	*Rad., Millirad.*
1	2	180.0 deg.	3.14 rad.
2	4	90.0	1.57
3	8	45.0	.785
4	16	22.5	.393
5	32	11.3	.196
6	64	5.63	.0982
7	128	2.81	.0491
8	256	1.41	.0245
9	512	42.2 min.	12.3 millirad.
10	1024	21.1	6.14
11	2048	10.5	3.07
12	4096	5.27	1.53
13	8192	2.64	.767
14	16384	1.32	.383
15	32768	39.6 sec.	.192
16	65536	19.8	.0959
17	131072	9.89	.0479
18	262144	4.95	.0240
19	524288	2.47	.0120
20	1048576	1.24	.00599
21	2097152	.618	.00300
22	4194304	.309	.00150
23	8388608	.154	.000749
24	16777216	.077	.000375

Table 7-7. Angles to Decimals

Minutes into Decimals of a Degree				*Seconds into Decimals of a Degree*			
Min.	*Dec. of Degree*	*Min.*	*Dec. of Degree*	*Sec.*	*Dec. of Degree*	*Sec.*	*Dec. of Degree*
1	0.016667	31	0.516667	1	0.000278	31	0.008611
2	0.033333	32	0.533333	2	0.000556	32	0.008889
3	0.050000	33	0.550000	3	0.000833	33	0.009167
4	0.066667	34	0.566667	4	0.001111	34	0.009444
5	0.083333	35	0.583333	5	0.001389	35	0.009722
6	0.100000	36	0.600000	6	0.001667	36	0.010000
7	0.116667	37	0.616667	7	0.001944	37	0.010278
8	0.133333	38	0.633333	8	0.002222	38	0.010556
9	0.150000	39	0.650000	9	0.002500	39	0.010833

Table 7-7. Angles to Decimals (Cont.)

Minutes into Decimals of a Degree				*Seconds into Decimals of a Degree*			
Min.	*Dec. of Degree*	*Min.*	*Dec. of Degree*	*Sec.*	*Dec. of Degree*	*Sec.*	*Dec. of Degree*
10	0.166667	40	0.666667	10	0.002778	40	0.011111
11	0.183333	41	0.683333	11	0.003056	41	0.011389
12	0.200000	42	0.700000	12	0.003333	42	0.011667
13	0.216667	43	0.716667	13	0.003611	43	0.011944
14	0.233333	44	0.733333	14	0.003889	44	0.012222
15	0.250000	45	0.750000	15	0.004167	45	0.012500
16	0.266667	46	0.766667	16	0.004444	46	0.012778
17	0.283333	47	0.783333	17	0.004722	47	0.013056
18	0.300000	48	0.800000	18	0.005000	48	0.013333
19	0.316667	49	0.816667	19	0.005278	49	0.013611
20	0.333333	50	0.833333	20	0.005556	50	0.013889
21	0.350000	51	0.850000	21	0.005833	51	0.014167
22	0.366667	52	0.866667	22	0.006111	52	0.014444
23	0.383333	53	0.883333	23	0.006389	53	0.014722
24	0.400000	54	0.900000	24	0.006667	54	0.015000
25	0.416667	55	0.916667	25	0.006944	55	0.015278
26	0.433333	56	0.933333	26	0.007222	56	0.015556
27	0.450000	57	0.950000	27	0.007500	57	0.015833
28	0.466667	58	0.966667	28	0.007778	58	0.016111
29	0.483333	59	0.983333	29	0.008056	59	0.016389
30	0.500000	60	1.000000	30	0.008333	60	0.016667

Table 7-8. Inch-Millimeter Equivalents of Decimal and Common Fractions From 1/64 to 1 in.

Inch	*½'s*	*¼'s*	*8ths*	*16ths*	*32nds*	*64ths*	*Millimeters*	*Decimals of an Inch*
						1	0.397	0.051 625
					1	2	0.794	0.031 25
						3	1.191	0.046 875
				1	2	4	1.588	0.062 5
						5	1.984	0.078 125
					3	6	2.381	0.093 75
						7	2.778	0.109 375
			1	2	4	8	3.175	0.125 0
						9	3.572	0.140 625
					5	10	3.969	0.156 25
						11	4.366	0.171 875
				3	6	12	4.762	0.187 5

Table 7-8. Inch-Millimeter Equivalents of Decimal and Common Fractions From 1/64 to 1 in. (Cont.)

Inch	*½'s*	*¼'s*	*8ths*	*16ths*	*32nds*	*64ths*	*Millimeters*	*Decimals of an Inch*
						13	5.159	0.203 125
					7	14	5.556	0.218 75
						15	5.953	0.234 375
		1	2	4	8	16	6.350	0.250 0
						17	6.747	0.265 625
					9	18	7.144	0.281 25
						19	7.541	0.296 875
				5	10	20	7.938	0.312 5
						21	8.334	0.328 125
					11	22	8.731	0.343 75
						23	9.128	0.359 375
			3	6	12	24	9.525	0.375 0
						25	9.922	0.390 625
					13	26	10.319	0.406 25
						27	10.716	0.421 875
				7	14	28	11.112	0.437 5
						29	11.509	0.453 125
					15	30	11.906	0.468 75
						31	12.303	0.484 375
	1	2	4	8	16	32	12.700	0.500 0
						33	13.097	0.515 625
					17	34	13.494	0.531 25
						35	13.891	0.546 875
				9	18	36	14.288	0.562 5
						37	14.684	0.578 125
					19	38	15.081	0.593 75
						39	15.478	0.609 375
			5	10	20	40	15.875	0.625 0
						41	16.272	0.640 625
					21	42	16.669	0.656 25
						43	17.066	0.671 875
				11	22	44	17.462	0.687 5
						45	17.859	0.703 125
					23	46	18.256	0.718 75
						47	18.653	0.734 375
		3	6	12	24	48	19.050	0.750 0

Table 7-8. Inch-Millimeter Equivalents of Decimal and Common Fractions From 1/64 to 1 in. (Cont.)

Inch	*½'s*	*¼'s*	*8ths*	*16ths*	*32nds*	*64ths*	*Millimeters*	*Decimals of an Inch*
						49	19.447	0.765 625
					25	50	19.844	0.781 25
						51	20.241	0.796 875
				13	26	52	20.638	0.812 5
						53	21.034	0.828 125
					27	54	21.431	0.843 75
						55	21.828	0.859 375
			7	14	28	56	22.225	0.875 0
						57	22.622	0.890 625
					29	58	23.019	0.906 25
						59	23.416	0.921 875
				15	30	60	23.812	0.937 5
						61	24.209	0.953 125
					31	62	24.606	0.968 75
						63	25.003	0.984 375
1	2	4	8	16	32	64	25.400	1.000 0

8. GLOSSARY

ACCURACY – The ratio of the error to the full-scale output or the ratio of the error to the output, as specified, expressed in percent. Accuracy may be expressed in terms of units of input, or as within ±x percent of full scale output. Use of the term accuracy should be limited to generalized descriptions of characteristics. It should not be used in specifications. The term error is preferred in specifications and other specific descriptions of transducer performance.

AMBIENT CONDITIONS – The conditions (pressure, temperature, etc.) of the medium surrounding the case of the transducer.

AMBIGUITY – Inherent error arising from multiple bit changes in a polystrophic code when going from one digit to an adjacent digit; can usually be corrected through proper logic design.

AND GATE – A logic element or circuit operating such that if all inputs are true (binary 1), the output indicates true; and that if one or more inputs are false (binary 0), the output is false.

ANGULAR MISALIGNMENT – The maximum deviation in perpendicularity between the encoder shaft and the face of the mounting surface, represents the total of shaft misalignment, shaft runout, and mounting face runout measured at the worst respective positions.

ANTIAMBIGUITY LOGIC – Prevents ambiguous outputs from encoders using polystrophic codes.

AXIAL LOAD, MAXIMUM – The maximum axial force that may be applied in either direction without affecting encoder performance (life).

BINARY – The term referring to the number 2 or to the number system with a radix of 2.

BINARY CODED DECIMAL – A decimal notation in which the individual decimal digits are each represented by a group of binary bits. Usually associated with codes of four or more bits used to define the Arabic numbers 0 through 9.

BINARY NUMBER – A counting system in which only two digits are used (1,0).

BIT – An abbreviation for BInary digiT and has the value of either true (1) or false (0), on or off; the basic unit of the binary system.

CAPACITY – The total number of counts available from an encoder.

CIRCULAR MIL – 1 cmil = $(\pi/4) \cdot 10^{-6}$ in^2

CODE – A number of binary digits uniquely arranged to define each position in a given number system.

COMMAND – An instruction coded in binary form.

COMPENSATION – Provision of a supplemental device, circuit, or special materials to counteract known sources of error.

COUNT ERROR – An omission or mistake in coded output.

COUNT TRANSITION POINT – The midpoint of boundary between two adjacent output counts.

COUNTS PER TURN – The total number of code positions per 360° of encoder shaft rotation.

CYCLE PER SECOND – IEC recommends the new name hertz (Hz) for this unit, and hertz has been adopted by the Conference Generale des Poids et Mesures.

DEGREE CELSIUS – The word centigrade (for the Celsius temperature scale) was abandoned by the Conference Generale des Poids et Mesures in 1948.

DIGIT – A character used to represent integers smaller than the radix, e.g., 0 through 9 in decimal notation.

ERROR – The algebraic difference between the indicated value and the true value of the input.

EXCITATION – The external electrical voltage and/or current applied to a transducer for its proper operation.

EXCLUSIVE OR GATE – A logic element with two inputs and one output having the property that if either input is true, but not both true, the output is true and if both inputs are true or both inputs false the output is false.

FLIP-FLOP – A circuit containing logic elements capable of assuming either one of two stable states at any given time.

FREQUENCY RESPONSE – The change in amplitude of the output waveform with respect to frequency of the input.

GATE – A logic element having one output channel and one or more input channels, i.e., AND gate, OR gate, etc.

HERTZ – New name for cycles per second.

INCLUSIVE OR GATE – A logic element or circuit which operates such that the output is false only when all inputs are false.

INTERFACE – Interconnections of one system element to another.

LOAD IMPEDANCE – The impedance presented to the output terminals of a transducer by the associated external circuitry.

MIL = 0.001 inch.

MONOSTROPHIC CODE – A binary code in which only one bit changes between any two adjacent code positions.

MOUNTING ERROR – The error resulting from mechanical deformation of the transducer caused by mounting the transducer and making all input and electrical connections.

NULL – A condition, such as of balance, which results in a minimum absolute value of output.

OCTAL – Pertaining to a number system with a radix of eight.

OPERATING SPEED, MAXIMUM – The maximum angular velocity at which an encoder may operate and still maintain specified accuracy.

OR GATE – A logic component having the property that if any one input is true the output is true and the output is false only when all inputs are false.

OUTPUT – The electrical quantity, produced by a transducer, which is a function of the applied input.

OUTPUT IMPEDANCE – The impedance across the output terminals of a transducer presented by the transducer to the associated external circuitry.

PARITY BIT – A binary digit appended to an array of bits to make the sum of all bits always odd or always even (synonymous with odd-even check).

POLYSTROPHIC CODE – A binary code in which, for at least one count transition, two or more bits are required to change simultaneously in going from one adjacent code position to another.

QUANTIZATION ERROR – The inherent fixed error associated with digitizing an analog shaft position in that a continuous form of data is being replaced by noncontinuous increments.

RADIX – The number of digit symbols in a number system; the numerical base of the number system.

RELIABILITY – The probability that an observed or sample value of encoder output is exactly equal to the required output.

REPEATABILITY – The ability of a transducer to reproduce output readings when the same input value is applied consecutively, under the same conditions, and in the same direction.

RESET – To restore a storage device to a prescribed state.

RESOLUTION – A measure of the smallest change of input which can be detected by the encoder.

RETICLE – The pattern of lines and spaces that is stationary with respect to the optical encoders light sensor.

SLEW SPEED – The maximum velocity to which an encoder may be accelerated and still regain full accuracy when slowed below the maximum speed.

STABILITY – The ability of a transducer to retain its performance characteristics for a relatively long period of time.

STORAGE – Pertaining to a device into which data can be entered, in which it can be held, and from which it can be retrieved at a later time.

TRANSDUCER – A device which provides a usable output in response to a specified input.

ZERO REFERENCE – An output signal produced once in some specified displacement (usually once per revolution). Used for powerfail recovery, error checking, or for calibration.

NAME _____

TITLE _____

COMPANY _____

COMPANY
ADDRESS _____

CITY, STATE,
ZIP _____

PHONE (AREA CODE) _____ NUMBER _____

_____

Please complete this registration card and return to DRC so that we may inform you of new developments in the field of digitizing rotary and linear motion.

NAME _____

TITLE _____

COMPANY _____

COMPANY
ADDRESS _____

CITY, STATE,
ZIP _____

PHONE (AREA CODE) _____ NUMBER _____

_____

I am especially interested in the latest information on the following DRC® products:

- ☐ **Rotary Encoders**
- ☐ **Digital Readout Systems**
- ☐ **Disc File Transducers**
- ☐ **Linear Encoders, Enclosed**
- ☐ **Linear Encoders, Open**
- ☐ **SST Transducers**
- ☐ **Optical Tachometers**
- ☐ **Counters**

- ☐ **Please have your representative contact me.**
- ☐ **I have a specific application involving:**

_____

_____

_____

NAME _____

TITLE _____

COMPANY _____

COMPANY
ADDRESS _____

CITY, STATE,
ZIP _____

PHONE (AREA CODE) _____ NUMBER _____

_____

I am especially interested in the latest information on the following DRC® products:

- ☐ **Rotary Encoders**
- ☐ **Digital Readout Systems**
- ☐ **Disc File Transducers**
- ☐ **Linear Encoders, Enclosed**
- ☐ **Linear Encoders, Open**
- ☐ **SST Transducers**
- ☐ **Optical Tachometers**
- ☐ **Counters**

- ☐ **Please have your representative contact me.**
- ☐ **I have a specific application involving:**

_____

_____

_____

First Class
Permit No. 2
Wilmington,
MA 01887

BUSINESS REPLY MAIL No postage necessary if mailed in the United States

Postage will be paid by

DYNAMICS RESEARCH CORPORATION
PRECISION MEASUREMENT DIVISION
50 Concord Street
Wilmington, Mass. 01887

First Class
Permit No. 2
Wilmington,
MA 01887

BUSINESS REPLY MAIL No postage necessary if mailed in the United States

Postage will be paid by

DYNAMICS RESEARCH CORPORATION
PRECISION MEASUREMENT DIVISION
50 Concord Street
Wilmington, Mass. 01887

First Class
Permit No. 2
Wilmington,
MA 01887

BUSINESS REPLY MAIL No postage necessary if mailed in the United States

Postage will be paid by

DYNAMICS RESEARCH CORPORATION
PRECISION MEASUREMENT DIVISION
50 Concord Street
Wilmington, Mass. 01887

Condensed Catalog

Rotary and Linear Optical Encoders and Digital Measuring Systems

DRC

DYNAMICS RESEARCH CORPORATION

Rotary and Linear Optical Encoders and Digital Measuring Systems

Capabilities of Dynamics Research Corporation

Who is DRC?

We're one of the largest suppliers of digital transducers and readout systems in the United States. For over twenty years we've built our reputation with industrial, commercial, and military customers. In fact, no manufacturer has comparable experience in designing, making, or servicing digital readouts for such a wide variety of position applications. Among others, we serve Pratt & Whitney, Bridgeport, GM, Moore Special Tool, Digital Equipment, and The U.S. Air Force. Our reputation for quality and service can be verified with these or hundreds of other customers whose names we'll gladly supply.

Quality Control

Every component is made and inspected in our own plant. So we're not dependent upon outside vendors. We're able to guard our standards of quality, service, and delivery. And we're set up to test the accuracy and reliability of our products in every environment they may encounter. Every product is specifically designed for easy, rapid inspection and testing.

A reputation made . . . and kept

DRC has never failed a customer. We'll never fail you. And whatever it takes to prevent down-time on our equipment in your plant, will be done. Ask our customers . . . then see for yourself.

Optical Rotary Encoders

The DRC product line of compact, incremental rotary encoders has been designed for a variety of applications. Features include rugged bearing structures, high accuracy, reliable operation, single voltage electronics, and the highest resolution in any comparable size. In addition, the units offer the user a variety of outputs: cell, TTL square wave or logic. Each model offers the "DRC ZERO" a unique noise free reference signal.

Model 29
Rugged Industrial
up to 10,000 counts per revolution.

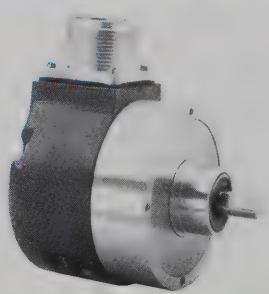

Model 39
LED Light Source
up to 10,000 counts per revolution.

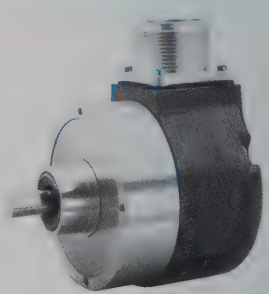

Model 29EM
English/Metric Dual Track
up to 4000/10160 counts per revolution.

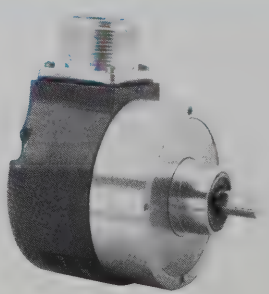

Model 29HS
Thru Shaft Applications
up to 10,000 counts per revolution.

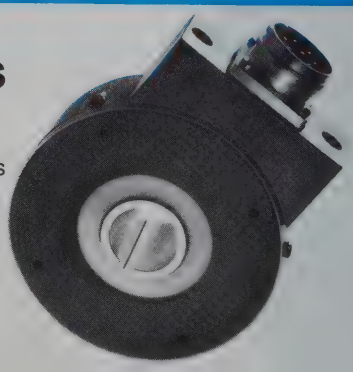

The DRC Digital Measuring Systems

DRC has specialized in the development of digital measuring systems with high accuracy, and which offer the user a simple, low-cost means of increasing productivity.

Higher efficiency is achieved by both machine and operator as the system reduces time spent on set-up, positioning and machining, plus operator training and supervision. Rejects and scrap are reduced, and work in process inventory moves more rapidly.

The high performance DRC Systems feature solid state optical transducers and large LED digital displays. All components can be easily installed, aligned and maintained. They are fully enclosed in a rugged sealed housing to resist oil and metal chips under the most severe machine shop conditions.

Optional features are number insertion, English-Metric electronic conversion, preset coincidence, Metric, 50 Hertz, and radius-diameter switching.

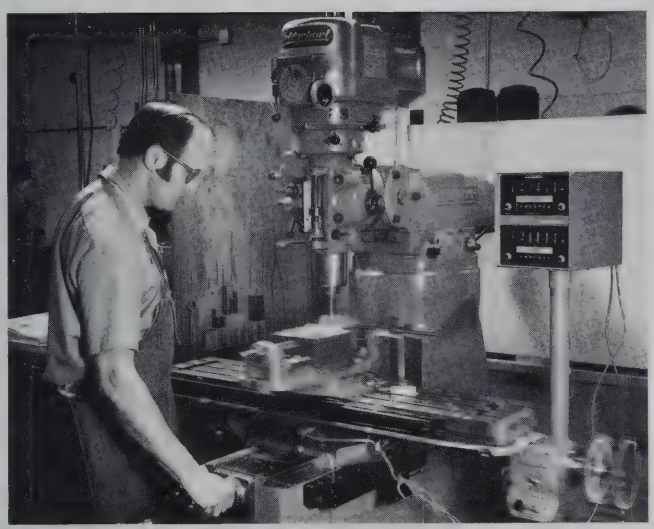

The DRC 500

A .0005″ resolution system offering noise-free operations at speeds up to 30″ per second. This model can accommodate travels up to 103″.

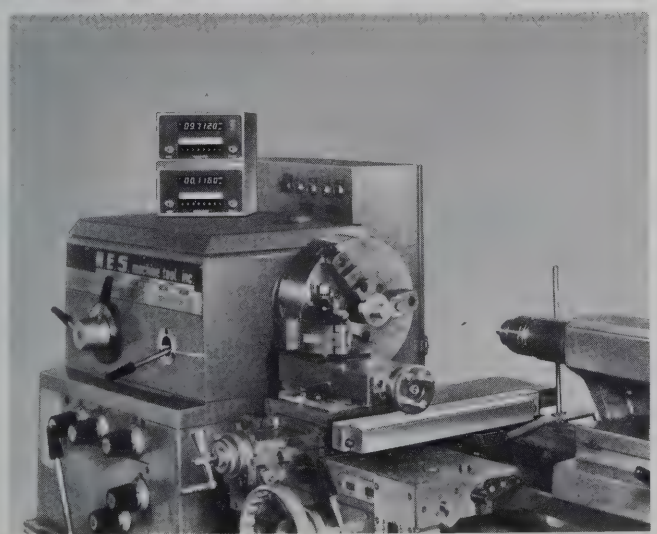

The DRC 100

A .0001″ resolution system offers speeds up to 6″ per second. This model can accommodate travels up to 49″.

Rotary and Linear Optical Encoders and Digital Measuring Systems

Capabilities of Dynamics Research Corporation

Who is DRC?

We're one of the largest suppliers of digital transducers and readout systems in the United States. For over twenty years we've built our reputation with industrial, commercial, and military customers. In fact, no manufacturer has comparable experience in designing, making, or servicing digital readouts for such a wide variety of position applications. Among others, we serve Pratt & Whitney, Bridgeport, GM, Moore Special Tool, Digital Equipment, and The U.S. Air Force. Our reputation for quality and service can be verified with these or hundreds of other customers whose names we'll gladly supply.

Quality Control

Every component is made and inspected in our own plant. So we're not dependent upon outside vendors. We're able to guard our standards of quality, service, and delivery. And we're set up to test the accuracy and reliability of our products in every environment they may encounter. Every product is specifically designed for easy, rapid inspection and testing.

A reputation made . . . and kept

DRC has never failed a customer. We'll never fail you. And whatever it takes to prevent down-time on our equipment in your plant, will be done. Ask our customers . . . then see for yourself.

Optical Rotary Encoders

The DRC product line of compact, incremental rotary encoders has been designed for a variety of applications. Features include rugged bearing structures, high accuracy, reliable operation, single voltage electronics, and the highest resolution in any comparable size. In addition, the units offer the user a variety of outputs: cell, TTL square wave or logic. Each model offers the "DRC ZERO" a unique noise free reference signal.

Model 29
Rugged Industrial
up to 10,000 counts per revolution.

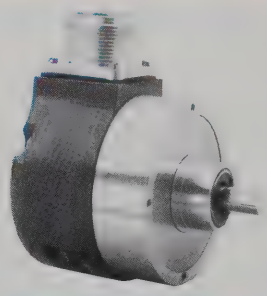

Model 39
LED Light Source
up to 10,000 counts per revolution.

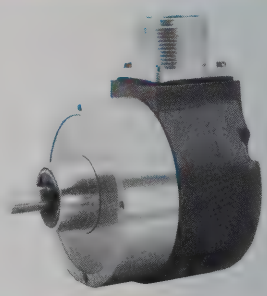

Model 29EM
English/Metric Dual Track
up to 4000/10160 counts per revolution.

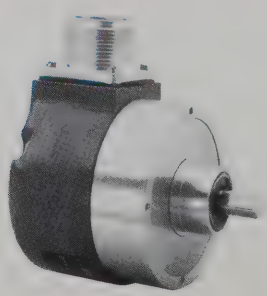

Model 29HS
Thru Shaft Applications
up to 10,000 counts per revolution.

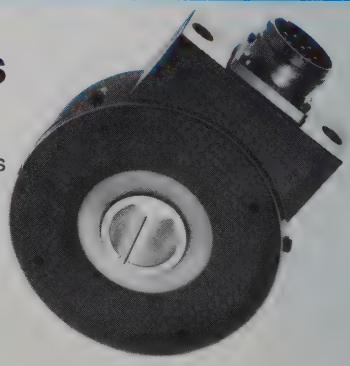

Model 77
Low Cost Industrial

up to 8000 counts per revolution. Also available inch / millimeter dual track.

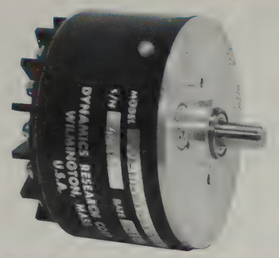

Model 35
High Performance

up to 40,000 counts per revolution.

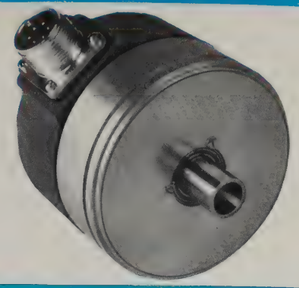

PULSTAC™ Modular Optical Tachometer. A low cost "kit" encoder for mounting to D.C., torque, high speed, low inertia or stepper motors.

Model TK 701
for up to 1000 lines

cell output, dual channel, zero reference.

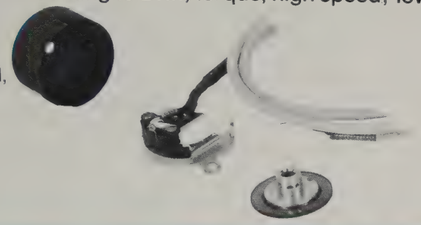

Model TK 702
for up to 1000 lines

square-wave output, dual channel.

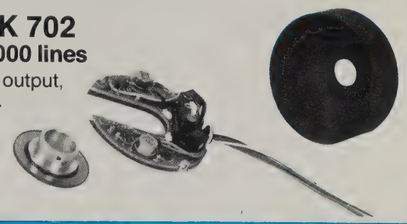

Optical Linear Encoders

The DRC product line of optical / linear measuring encoders provides for high speed, accurate, reliable, direct measurement of linear motion. The superior precision linear scales are produced by the DRC Metrifilm™ process.

Utilizing high technology and advanced production techniques, the process is accomplished by vacuum deposition using Inconel and a DRC-designed numerically-controlled, linear ruling engine equipped with laser interferometer feed-back.

The linear encoder line is ideal for measuring machine tool tables, X-Y coordinate machines, printed circuit drilling equipment, automated production machining, inspection systems and general metrology.

The systems are designed for relatively easy installation, quick trouble shooting, minimal maintenance, and years of trouble-free service.

Model SST
Short Stroke Transducer

.0001″ resolution and accuracy – up to 2″ stroke with protective neoprene bellows and spring loaded shaft.

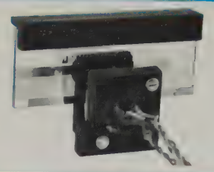

Model LMS 106
Disk File

application for sensing head position.

Model LMS 50
High Performance Encoder

resolution 50 microinch (1 micron Metric) includes head and scale.

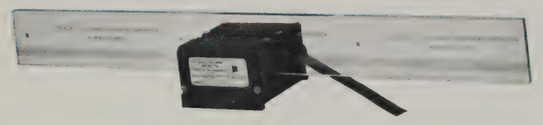

Model LMS 100
High Performance Encoder

resolution 100 microinch (2 micron Metric) includes head and scale.

Model LMT 100
Enclosed 100 microinch Encoder

resolution 100 microinch (2 micron Metric) fully enclosed head and scale, easy to install.

Model LMS 100
High Performance Encoder with Zero Reference

resolution 100 microinch (2 micron Metric), zero reference, includes head and scale.

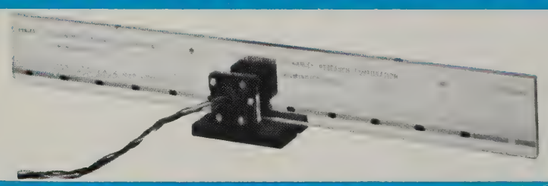

Model LMS 500
High Performance Encoder

resolution 500 microinch (10 micron Metric) includes head and scale.

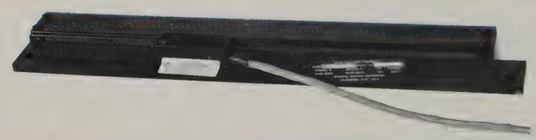

Model LMT 500
Enclosed 500 microinch Encoder

resolution 500 microinch (10 micron Metric) fully enclosed head and scale, easy to install.

Specials:

Dynamics Research Corporation also offers its encoder design capability to customers for special applications. Some of the products shown in this catalog are derivatives of products developed to meet a special requirement.

If your application requirements are not readily met by any of the models shown here—call DRC. If it's available from one of our competitors we'll tell you how to get in touch with them. If it's not available anywhere, we'll tell you if it can be built and give you a price.

One way or another—we at DRC will get you an answer.

DMD—750

Digital Readout Display

A rugged 6-digit LED display unit, with overflow, designed for the toughest environment. Features include noise rejection, low voltage protection, ± sign and decimal point, zero reset, on-off switch, power failure indication and 110V operation.

Optional features are number insertion, English-Metric electronic conversion, preset coincidence, Metric, 50 Hertz, and radius-diameter switching.

DPR Series

Highly versatile digital position readout

The DPR series is designed to eliminate interface problems common in typical industrial applications. Its advanced solid state design provides accurate, rapid measurement and display of linear and rotary data presented as quadrature-phased square waves. The unit is available up to 7 full digits.

Optional features are number insertion, English Metric electronic conversion, remote zero reset, presets, and BCD outputs.

DRC® Dynamics Research Corporation

Precision Measurement Division
60 Concord Street, Wilmington, MA 01887
Telephone (617) 658-6100/TWX: (710) 347-0299

PRINTED IN U.S.A.

Models

DRC-29/29 EM

Optical Shaft Angle Encoder for Rugged Industrial Applications

Bulletin 12-300

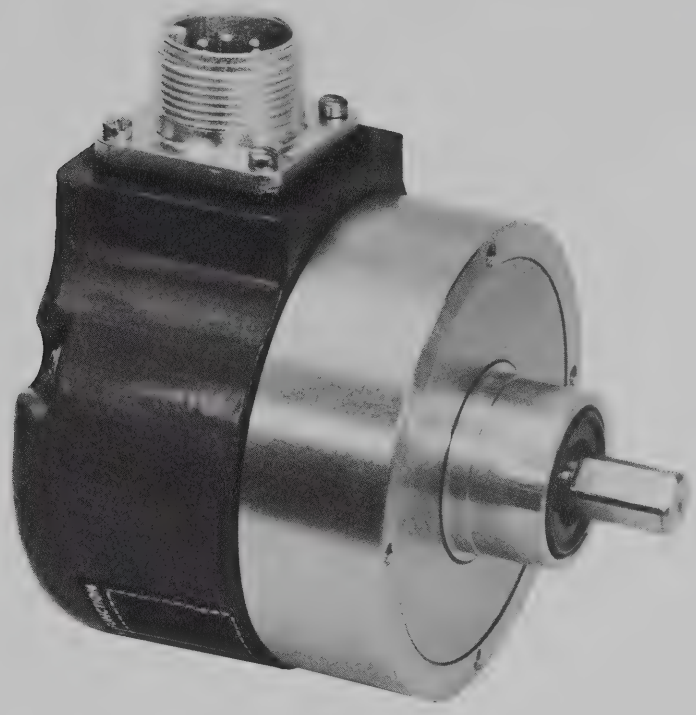

- Compact, Ruggedized
- Up to 10,000 Counts per Shaft Revolution
- Single-Voltage Electronics
- Can Drive DTL, TTL, or High Noise Immunity Logic (HTL and MOS)
- English/Metric Combinations Available
- Supplied with sealed bearings for maximum reliability

The DRC Model 29, a compact and rugged industrial optical rotary incremental encoder, is available with discs having up to 2,500 cycles per shaft revolution. Built-in electronics can multiply the basic disc resolution 1, 2, or 4 times to provide up to 10,000 pulses per revolution. Utilizing a line-averaging technique the Model 29 achieves better accuracy and more reliable operation than is provided by single slit type encoders.

Powered with "single-voltage" electronics, the Model 29, with optional high level logic, provides exceptional noise immunity. The 30-pound axial and radial load capability offers the highest shaft loading capacity available in the industry for units of the same size and resolution. Customer may select electronics for DTL, TTL, or high noise immunity logic (HTL and MOS). Standard 5 or 6 volt units can drive ten or more TTL gates.

Model 29/29 EM Optical Shaft Angle Encoder

Specifications

Performance

Output Channels: Two count channels electrically phased 90° ± 22.5°
One (optional) Zero Reference signal channel as specified below

Count Channel Accuracy
Pulse-to-Adjacent Pulse
Single-Count logic: ± 7.2/N mechanical degrees, maximum
Two-Count logic: ± 15/N mechanical degrees, maximum
Four-Count logic: ± 22.5/N mechanical degrees, maximum

Pulse-to-Any-Other Pulse Pulse-to-Adjacent Pulse accuracy ±22.5/N mechanical degrees, maximum
Note: "N" = cycles/shaft revolution

Count Channel Electrical Phase Relationship: 90° ±22.5°

Count Channel Output Signal Characteristics

	Waveform	Signal Levels
Units without Electronics:	Quasi-Sinewave (Fig. 1)	40 millivolts, P-P minimum, into 2,000 ohms (at 40 kHz)
Units with Amplifier/Shapers:	Square-Wave (Fig. 2)	**5 volt units**—logic "1" = 2.8 v, minimum; Logic "O" = 0.4 v maximum. Minimum load resistance = 1000 ohms; maximum sink current 16 milliamperes.
Units with Pulse Outputs:	Pulse (Fig. 3)	**6 volt units**—Logic "1" = 3.8 v, minimum; Logic "O", load and sink values same as for 5-volt units.
NOTE: Pulse signal levels are same as for square wave units.		**12 and 15 volt units**—Logic "1" defined by Rp (Fig. 5) maximum sink current = 16 milliamperes.

Count Channel DC offest (units without electronics): 10% of P-P signal output, maximum

Rise and Fall Times (units with square-wave or pulse outputs): (5 and 6 volt units only) 100 ns (no load); 1 μsec (maximum) into 1000 pF load capacitance (fanout of 2)

Optional Zero Reference Channel Output Signal
Angular Width: 1 ±½ count channel cycle
Amplitude
Units without electronics: 20 millivolts, into 2,000 ohms (See V_{zr}, Fig. 1)
Units with square-wave or pulse outputs: Same as for corresponding count track channels

Frequency Response: 0-40 kHz standard

Temperature: 32°F to 140°F (operating)

Mechanical

Mechanical Shaft Speed
Continuous duty: 3000 rpm, maximum
10% duty cycle: 5000 rpm, maximum

Starting Torque
Models without shaft seal: 1oz-in, maximum @ 77°F
Models with shaft seal: 5 oz-in, maximum @ 77°F

Shaft angular acceleration: 10^6 radians/sec^2, maximum

Shaft inertia: 0.0009 oz-in-sec^2

Shaft loading
Axial: 30 lbs, maximum
Radial (at shaft end): 30 lbs, maximum

Weight: 17 ounces

Connectors (See "Installation," page 4)

Specifications subject to change without notice

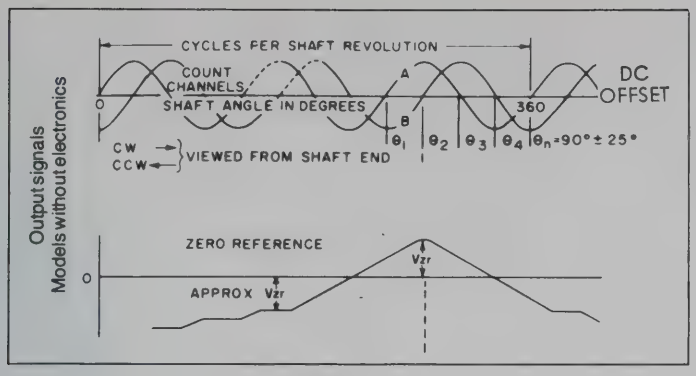

Figure 1

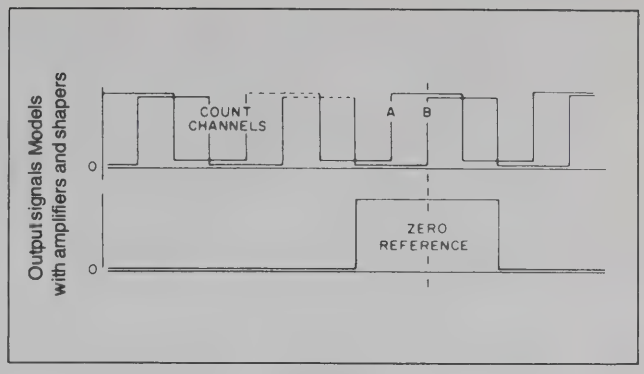

Figure 2

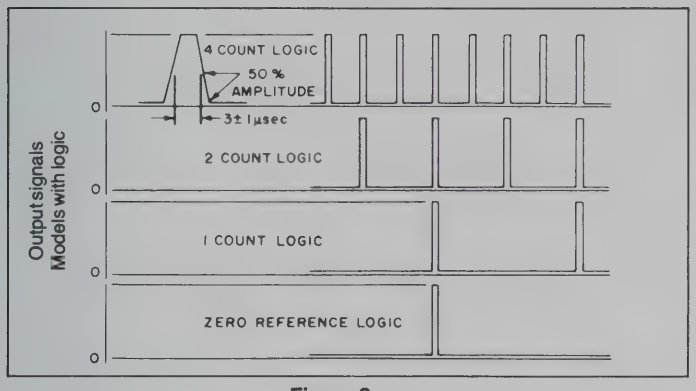

Figure 3

Power Requirements

Table 1-POWER REQUIREMENTS (dc supply voltage regulation: ± 5%)

SUPPLY VOLTAGE	CURRENT REQUIREMENTS (milliamperes)					
	(Units with sine-wave output)		(Units with squarewave output)		(Units with pulse output)	
	No ZR*	ZR*	No ZR*	ZR*	No ZR*	ZR*
+5v	240	360	308	452	364	526
+6v	240	360	325	475	392	566
+12v	120	120	238	262	294	337
+15v	120	120	238	262	not available	

*ZR = Zero Reference Output Channel

Note: Encoders may be operated from negative supplies as long as the more positive line is tied to V+.

How to order

Model No. ○ — ○ ○ — ○ ○ ○ ○ ○

- 29-Single line count 29E/M Dual track English/Metric
- MOUNT
  1=Bolt Circle Mount: radial connector
  2=Synchro Mount: radial connector
  3=Bolt Circle Mount: axial connector
  4=Synchro Mount: axial connector
- SHAFT SEAL
  0=Without shaft seal
  1=With shaft seal
- POWER SUPPLY
  A=6v
  B=5v
  C=12v
  D=15v
- ZERO REFERENCE
  0=Without Zer. Ref.
  1=With Zer. Ref.
- OUTPUT CIRCUITRY
  0=Cell output only
  1=One-count Logic
  2=Two-count Logic
  3=Amplifier/Shaper
  4=Four-count Logic
- CYCLES PER SHAFT REVOLUTION
  Standard List follows. Consult factory for other cycles/shaft revolution

50*	250	419*	635	1000	1500
100	256*	450*	720	1024	1800
128*	300*	500	750	1250	2000
150*	325*	512	800	1270	2500
160*	360	600	900	1440	
200	400	625			

  *=No Zero Reference Track
- OTHER OPTIONS
  X=Customer option described on order

Model 29 EM Line Count Available

100/254**	500/635**	600/1524**
1000/2540**	500/1270**	852/1878**
250/635**		

**Zero reference not available with logic. Standard ZR width aligns with lowest line count.

Warranty

DRC warrants its products against defects in material and workmanship under normal and proper use and service for a period of one year from date of shipment. DRC's obligation under this warranty is limited to, at DRC's election, furnishing without charge, F.O.B. Wilmington, Massachusetts, a replacement for any defective part or repairing such part.

This warranty does not apply to any product which has been operated at other than specified voltages or currents or which has been subjected to abuse or in which the encoder housing has been opened or where the product has otherwise been tampered with. The foregoing warranty is exclusive and in lieu of all other warranties of quality, whether written, oral or implied.

Installation

The Model 29 may be mounted in any position.

Pin Assignments are shown in table 1. For installation convenience each unit has pin assignments on its cover.

Table 1 — PIN CONNECTIONS FOR MODEL 29

Pin Designation	Units with Sinewave Outputs	Units with Squarewave Outputs	Units with Pulse Outputs
A	Channel A+	Channel A	CW
B	Channel A−	spare	spare
C	Channel B+	Channel B	CCW
D	Channel B−	spare	spare
E	ZR* or spare	ZR* or spare	ZR* or spare
F	ZR* or spare	spare	TEST square wave
I	V+	V+	V+
J	GND	GND	GND

*ZR = Optional Zero Reference Channel

NOTE: Mating Connector, Type MS3106E 18-10S, supplied

Output Load information for 12 and 15 volt units is provided in Fig. 5.

Recommended Couplings for various drive shaft diameters are listed in Table 2.

Table 2 — RECOMMENDED BELLOWS COUPLINGS

Drive Shaft Diameter	Coupling Supplied With	DRC Part Number
¼"	set screws	B-2152-2
⅜"	set screws	B-2152-4
¼"	clamps	B-2152-5
⅜"	clamps	B-2152-6

COUPLING CHARACTERISTICS

Torque:	700 oz-in, maximum
Angular misalignment:	10°, maximum
Parallel misalignment:	.032 in., maximum
End-play:	±.050 in., maximum
Wind-up:	5 sec/oz-in. maximum

CAUTION: Care should be taken to regulate the supply voltage within the ±5% specified limits.

Table 3 — PIN CONNECTIONS FOR MODEL 29E/M

	CELL OUTPUT	AMP-SHAPER	LOGIC
Pin No.	Functions		
A	CH A+	CH A+	CW+
B	CH A−	CH A−	CW−
C	CH B+	CH B+	CCW+
D	CH B−	CH B−	CCW−
E	CH ZR+	CH ZR+	CH ZR+
F	CH ZR−	CH ZR−	NOTE 1
I	V+	V+	V+
J	GRD	GRD	GRD
G	METRIC	METRIC	METRIC
H	ENGLISH	ENGLISH	ENGLISH

NOTE: 1. Logic units W/O ZR function is "CH B−".
Logic units W/ZR function is "CH ZR−".

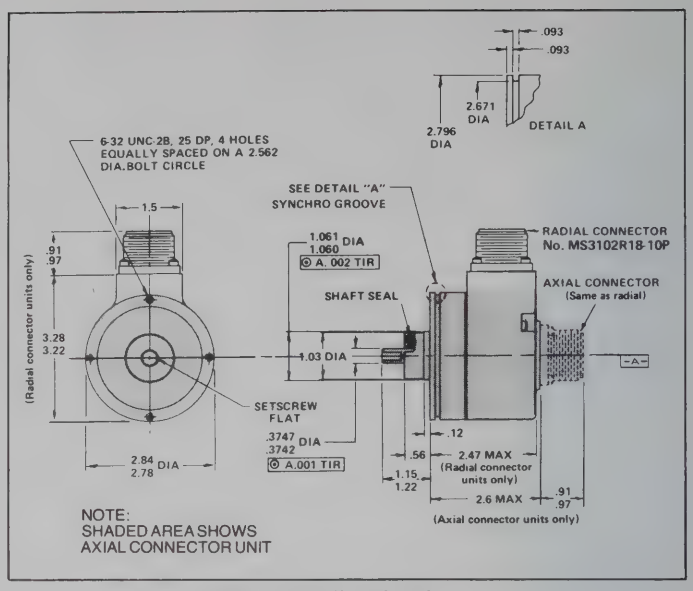

Figure 4 outline drawing

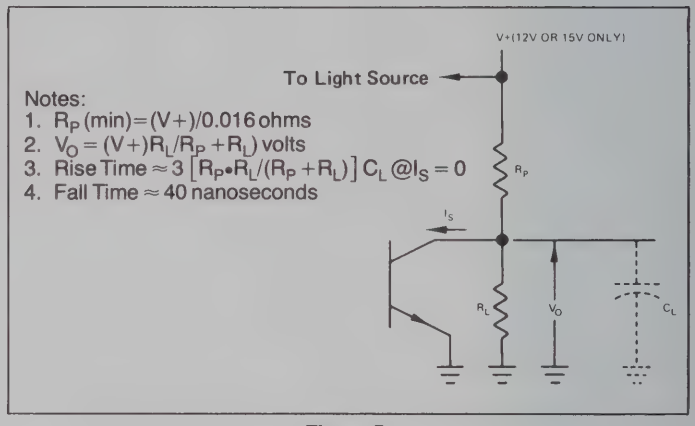

Figure 5

FIGURE 5 — TYPICAL OUTPUT CIRCUIT relates load (R_L) and customer-supplied "Pull-Up" resistor (R_P) for 12 or 15 volt units only. Maximum sink current for 12 or 15 volt operation is 16 milliamperes. Time constant or R_P, R_L and cable capacitance ("C_L") limits maximum value of R_P.

DRC® Dynamics Research Corporation

Components Division
60 Concord Street, Wilmington, MA 01887
Telephone (617) 658-6100/TWX: (710) 347-0299

Models

DRC-35/35 EM

High Performance Optical Shaft Angle Encoder

Bulletin 12-500

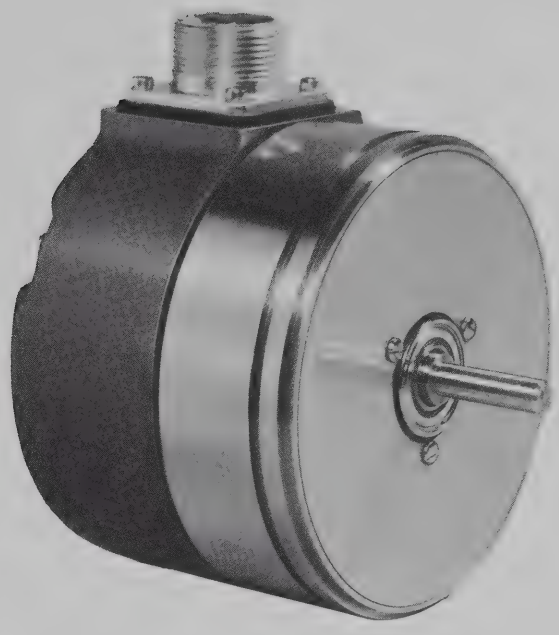

- Up to 125KHz Response
- Accuracy to 10 Arc Seconds
- Up to 36,000 Counts per Shaft Revolution
- Single-Voltage Electronics
- Can Drive DTL, TTL, or High Noise Immunity Logic (HTL and MOS)
- English / Metric Combinations Available
- Sealed bearings available for maximum reliability

The DRC Model 35, a high performance, rotary, optical incremental encoder, is available with discs having up to 9000 cycles per shaft revolution. Built-in electronics can multiply the basic disc resolution 1, 2, or 4 times to provide up to 36,000 pulses per revolution. Utilizing a line-averaging technique, the Model 35 achieves better accuracy and more reliable operation than is provided by single-slit type encoders. Also, DRC's unique OPTISYN™ dual-read principle provides radial run-out cancellation.

Powered with "single-voltage" electronics, the Model 35, with optional high-level logic, provides exceptional noise immunity. High frequency response permits high resolution/high RPM operation. Customer may select electronics for DTL, TTL or high noise immunity logic (HTL and MOS). Standard 5 or 6 volt units can drive ten or more TTL gates.

Model 35/35 EM Optical Shaft Angle Encoder

Specifications

Performance

Output Channels: Two count channels electrically phased 90° ± 22.5°
One (optional) Zero Reference signal channel as specified below

Count Channel Accuracy
Pulse-to-Adjacent Pulse
Single-Count logic: ± 7.2/N mechanical degrees, maximum
Two-Count logic: ± 15/N mechanical degrees, maximum
Four-Count logic: ± 22.5/N mechanical degrees, maximum

Pulse-to-Any-Other Pulse: Pulse-to-Adjacent Pulse accuracy ±22.5/N ±.0033 mechanical degrees maximum
Note: "N" = cycles/shaft revolution

Count Channel Electrical Phase Relationship: 90° ±22.5°

Count Channel Output Signal Characteristics

	Waveform	Signal Levels
Units without Electronics:	Quasi-Sinewave (Fig. 1)	40 millivolts, P-P minimum, into 2,000 ohms (at 40 KHz).
Units with Amplifier/Shapers:	Square-Wave (Fig. 2)	**5 volt units**—Logic "1" = 2.8 v, minimum; Logic "O" = 0.4 v maximum. Minimum load resistance = 1000 ohms; maximum sink current 16 milliamperes.
Units with Pulse Outputs:	Pulse (Fig. 3)	**6 volt units**—Logic "1" = 3.8 v, minimum; Logic "O", load and sink values same as for 5-volt units.
NOTE: Pulse signal levels are same as for square wave units.		**12 and 15 volt units**—Logic "1" defined by Rp (Fig. 5) maximum sink current = 16 milliamperes.

Count Channel DC offset (units without electronics): 10% of P-P signal output, maximum

Rise and Fall Times (units with square-wave or pulse outputs): **(5 and 6 volts only); 1 μsec** (maximum) into 1000 pF load capacitance (fanout of 2)

Optional Zero Reference Channel Output Signal
Angular Width: 1 ±½ count channel cycle
Amplitude
(Units without electronics): 15 millivolts, into 2,000 ohms (See V_{zr} Fig. 1)
Units with square-wave or pulse outputs: Same as for corresponding count track channels

Frequency Response: 0-40KHz standard; 125KHz optional

Temperature: 32°F to 140°F (operating)

Mechanical

Mechanical Shaft Speed
Continuous duty: 3000 rpm, maximum
10% duty cycle: 5000 rpm, maximum

Starting Torque
Models w/standard bearings: 0.5 oz-in, maximum @ 77°F
Models w/sealed bearings: 2.0 oz-in, maximum @ 77°F

Shaft Angular Acceleration: 10^6 radians/sec^2 maximum

Shaft Inertia: 3.8×10^{-3} oz-in-sec^2

Shaft Loading
Axial: 10 lbs, maximum
Radial (at shaft end): 3 lbs, maximum

Connectors (See "Installation," page 4)

Specifications subject to change without notice

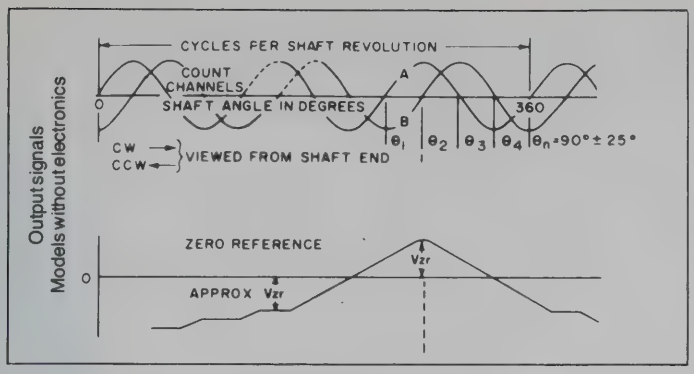

Figure 1

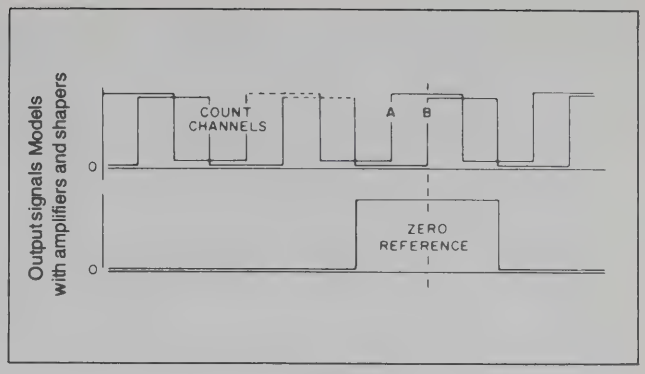

Figure 2

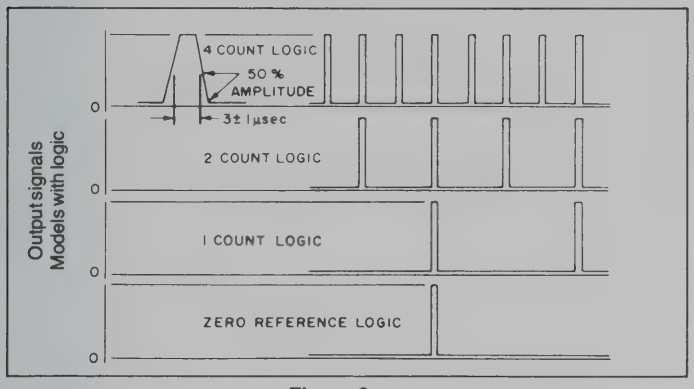

Figure 3

Power Requirements

Table 1-POWER REQUIREMENTS (dc supply voltage regulation: ± 5%)

SUPPLY VOLTAGE	CURRENT REQUIREMENTS (milliamperes)					
	(Units with sine-wave output)		(Units with squarewave output)		(Units with pulse output)	
	No ZR*	ZR*	No ZR*	ZR*	No ZR*	ZR*
+5v	240	300	308	392	364	470
+6v	240	300	325	415	392	500
+12v	120	120	238	262	294	337
+15v	120	120	238	262	not available	

*ZR = Zero Reference Output Channel

Note: Encoders may be operated from negative supplies as long as the more positive line is tied to V+.

How to order

Model No. — — — — —

35-Single line count
35 E/M Dual track
English/Metric

MOUNT
1=Bolt Circle Mount
2=Synchro Mount

POWER SUPPLY
A=6v
B=5v
C=12v
D=15v

BEARINGS
0=With Standard bearings
1=With Sealed bearings

OUTPUT CIRCUITRY
0=Cell output only
1=One-count Logic
2=Two-count Logic
3=Amplifier/Shaper
4=Four-count Logic

ZERO REFERENCE
0=Without Zer. Ref.
1=With Zer. Ref.

CYCLES PER SHAFT REVOLUTION
Standard List follows; consult factory for the line counts:

4096	5400	7200	8192
5000	6144	7500	9000

OTHER OPTIONS
X=Customer option described on order

Model 35 EM Line Count Available

2500/6350 3000/7620

NOTE: Zero reference is not available on English/Metric units

Warranty

DRC warrants its products against defects in material and workmanship under normal and proper use and service for a period of one year from date of shipment. DRC's obligation under this warranty is limited to, at DRC's election, furnishing without charge, F.O.B. Wilmington, Massachusetts, a replacement for any defective part or repairing such part.

This warranty does not apply to any product which has been operated at other than specified voltages or currents or which has been subjected to abuse or in which the encoder housing has been opened or where the product has otherwise been tampered with. The foregoing warranty is exclusive and in lieu of all other warranties of quality, whether written, oral or implied.

Installation

The Model 35 may be mounted in any position.
Pin Assignments are shown in Fig. 4
For installation convenience, each unit has pin assignment shown on label.

Table 2 – PIN CONNECTIONS FOR MODEL 35

Pin	FUNCTION		
	Sine Wave Outputs	Square Wave Outputs	Pulse Outputs
A	Channel A+	Channel A	CW
B	Channel A–	Channel B	CCW
C	Channel B+	ZR or spare	ZR or spare
D	Channel B–	Spare	TEST square-wave
E	ZR+ or spare	V+	V+
F	ZR– or spare	Ground	GND
I	V+		
J	Ground		

NOTE: 10 Pin Connector MS 3106E18-10S

NOTE: 6 Pin Connector MS 3106E14-6S

NOTE : For Sine Wave outputs connector is 10 pins MS3106E18-10S. All others are 6 pins MS3106E-14-6S.

Output Load: Information for 12 and 15 volt units is provided in Fig. 5

CAUTION: Care should be taken to regulate the supply voltage within the ± 5% specified limits.

Recommended Couplings: For various drive-shaft diameters, recommended couplings are listed in Table 3.

CAUTION: Never hard-couple encoder shaft to drive shaft.

Table 3 – RECOMMENDED BELLOWS COUPLINGS

Drive Shaft Diameter	Method of Attachment	DRC Part Number
¼″	set screws	B-2152-9
¼″	clamps	B-2152-1
⅜″	set screws	B-2152-2
⅜″	clamps	B-2152-5

Table 4 – PIN CONNECTIONS FOR MODEL 35 EM

Pin	Sine Wave	Square Wave or Pulse
A	Channel A+	Output CH A or CW
B	Channel A–	Output CH A– or CW –
C	Channel B+	Metric CH B or CCW
D	Channel B–	Metric CH B– or CCW –
E	Spare	Spare
F	Spare	Spare
G	Metric	Metric
H	English	English
I	V+	V+DC
J	Ground	Ground

NOTE: 10 Pin Connector MS 3106E18-10S

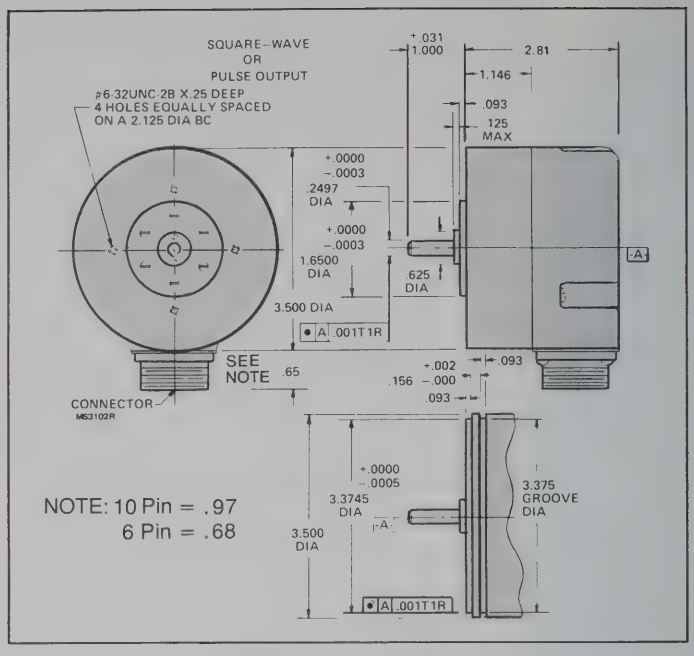

Figure 4 outline drawing

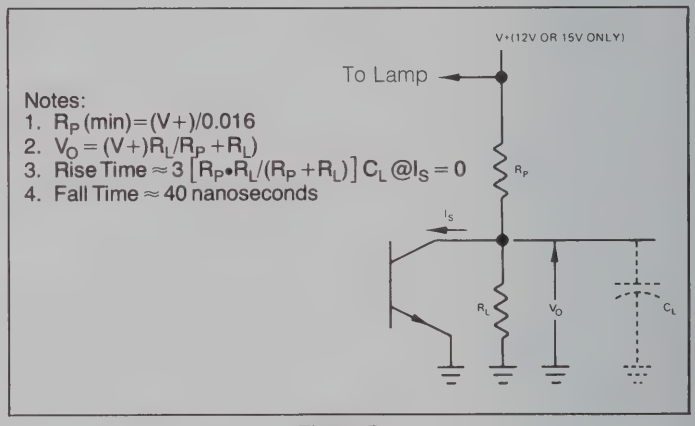

Figure 5

FIGURE 5 — TYPICAL OUTPUT CIRCUIT relates load (R_L) and customer-supplied "Pull-Up" resistor (R_P) for 12 or 15 volt units only. Maximum sink current for 12 or 15 volt operation is 16 milliamperes. Time constant of R_P, R_L and cable capacitance ("C_L") limits maximum value of R_P.

DRC® Dynamics Research Corporation

Components Division
60 Concord Street, Wilmington, MA 01887
Telephone (617) 658-6100/TWX: (710) 347-0299

Models

DRC-39/39 EM

Featuring Solid-State Light Source

Optical Shaft Angle Encoder for Rugged Industrial Applications

Bulletin 12-400

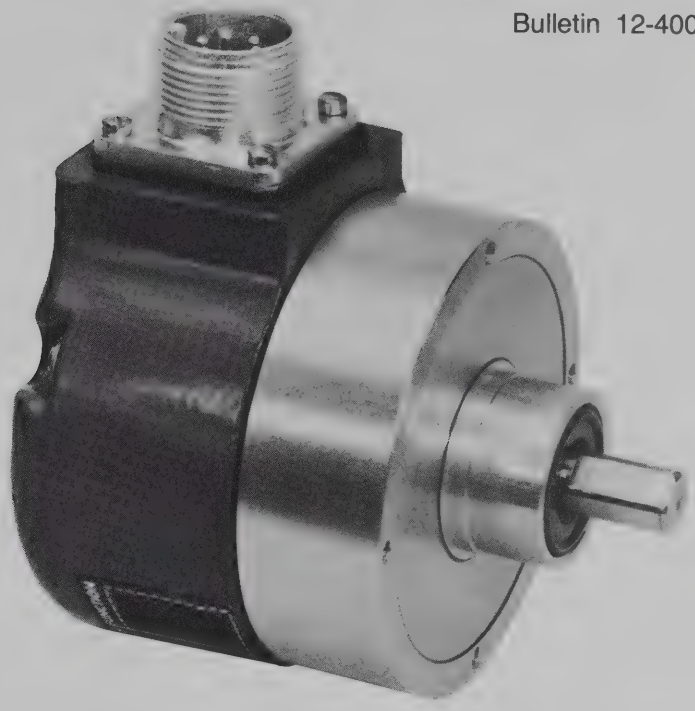

- Compact, Ruggedized
- Up to 10,000 Counts per Shaft Revolution
- Single-Voltage Electronics
- Can Drive DTL, TTL, or High Noise Immunity Logic (HTL and MOS)
- Directly Interchangeable with DRC Model 29
- English/Metric Combinations Available
- Supplied with sealed bearings for maximum reliability

The DRC Model 39, a compact and rugged industrial optical rotary incremental encoder, is available with discs having up to 2,500 cycles per shaft revolution. Built-in electronics can multiply the basic disc resolution 1, 2, or 4 times to provide up to 10,000 pulses per revolution. Utilizing a line-averaging technique the Model 39 achieves better accuracy and more reliable operation than is provided by single slit type encoders.

Powered with "single-voltage" electronics, the Model 39, with optional high level logic, provides exceptional noise immunity. The 30-pound axial and radial load capability offers the highest shaft loading capacity available in the industry for units of the same size and resolution. Customer may select electronics for DTL, TTL, or high noise immunity logic (HTL and MOS). Standard 5 or 6 volt units can drive ten or more TTL gates.

Model 39/39 EM Optical Shaft Angle Encoder

Specifications

Performance

Output Channels:	Two count channels electrically phased 90° ± 22.5° One (optional) Zero Reference signal channel as specified below	
Count Channel Accuracy		
Pulse-to-Adjacent Pulse		
Single-Count logic:	± 7.2/N mechanical degrees, maximum	
Two-Count logic:	± 15/N mechanical degrees, maximum	
Four-Count logic:	± 22.5/N mechanical degrees, maximum	
Pulse-to-Any-Other Pulse	Pulse-to-Adjacent Pulse accuracy ±22.5/N mechanical degrees, maximum	
Note: "N" = cycles/shaft revolution		
Count Channel Electrical Phase Relationship:	90° ±22.5°	
Count Channel Output Signal Characteristics	**Waveform**	**Signal Levels**
Units without Electronics:	Quasi-Sinewave (Fig. 1)	40 millivolts, P-P minimum, into 4,000 ohms (at 40 kHz)
Units with Amplifier/Shapers:	Square-Wave (Fig. 2)	**5 volt units**—logic "1" = 2.8 v, minimum; Logic "O" = 0.4 v maximum. Minimum load resistance = 1000 ohms; maximum sink current 16 milliamperes.
Units with Pulse Outputs:	Pulse (Fig. 3)	**6 volt units**—Logic "1" = 3.8 v, minimum; Logic "O", load and sink values same as for 5-volt units.
NOTE: Pulse signal levels are same as for square wave units.		**12 and 15 volt units**—Logic "1" defined by Rp (Fig. 5) maximum sink current = 16 milliamperes.
Count Channel DC offest (units without electronics):	10% of P-P signal output, maximum	
Rise and Fall Times (units with square-wave or pulse outputs):	**(5 and 6 volts only); 1** μsec (maximum) into 1000 pF load capacitance (fanout of 2)	
Optional Zero Reference Channel Output Signal		
Angular Width:	1 ±½ count channel cycle	
Amplitude		
Units without electronics:	20 millivolts, into 4,000 ohms (See V_{zr}, Fig. 1)	
Units with square-wave or pulse outputs:	Same as for corresponding count track channels	
Frequency Response:	0-40 kHz standard	
Temperature:	32°F to 140°F (operating)	

Mechanical

Mechanical Shaft Speed
Continuous duty: 3000 rpm, maximum
10% duty cycle: 5000 rpm, maximum

Starting Torque
Models without shaft seal: 1oz-in, maximum @ 77°F
Models with shaft seal: 5 oz-in, maximum @ 77°F

Shaft angular acceleration: 10^6 radians/sec^2, maximum

Shaft inertia: 0,0009 oz-in-sec^2

Shaft loading
Axial: 30 lbs, maximum
Radial (at shaft end): 30 lbs, maximum

Weight: 17 ounces

Connectors (See "Installation," page 4)

Specifications subject to change without notice

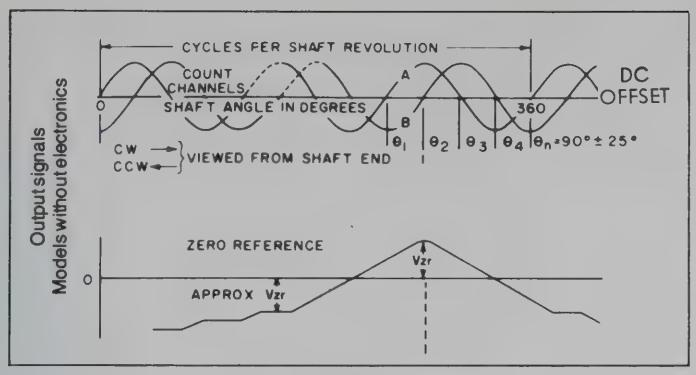

Figure 1

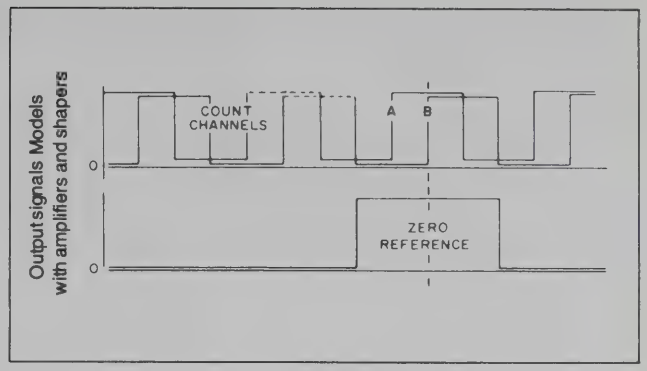

Figure 2

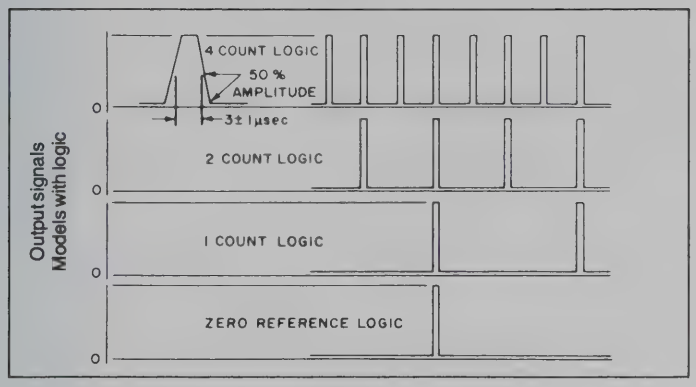

Figure 3

Power Requirements

Table 1-POWER REQUIREMENTS (dc supply voltage regulation: ± 5%)

SUPPLY VOLTAGE	CURRENT REQUIREMENTS (milliamperes)					
	(Units with sine-wave output)		(Units with squarewave output)		(Units with pulse output)	
	No ZR*	ZR*	No ZR*	ZR*	No ZR*	ZR*
+5v	200	300	268	392	324	466
+6v	200	300	285	415	352	506
+12v	200	300	205	235	265	310
+15v	200	300	205	235	not available	

*ZR = Zero Reference Output Channel

Note: Encoders may be operated from negative supplies as long as the more positive line is tied to V+.

How to order

Model No. — — — —

39-Single line count
39E/M Dual track
English/Metric

MOUNT
1=Bolt Circle Mount: radial connector
2=Synchro Mount: radial connector
3=Bolt Circle Mount: axial connector
4=Synchro Mount: axial connector

SHAFT SEAL
0=Without shaft seal
1=With shaft seal

POWER SUPPLY
A=6v
B=5v
C=12v
D=15v

ZERO REFERENCE
0=Without Zer. Ref.
1=With Zer. Ref.

OUTPUT CIRCUITRY
0=Cell output only
1=One-count Logic
2=Two-count Logic
3=Amplifier/Shaper
4=Four-count Logic

CYCLES PER SHAFT REVOLUTION
Standard List follows. Consult factory for other cycles/shaft revolution

50*	250	419*	635	1000	1500
100	256*	450*	720	1024	1800
128*	300*	500	750	1250	2000
150*	325*	512	800	1270	2048
160*	360	600	900	1440	2500
200	400	625			

*=No Zero Reference Track

OTHER OPTIONS
X=Customer option described on order

Standard Model 39 Line Count Available

100/254**	500/1270**	852/1878**
250/635**	600/1524**	1000/2540**
500/635**		

**Zero reference not available with logic. Standard ZR width aligns with lowest line count.

Warranty

DRC warrants its products against defects in material and workmanship under normal and proper use and service for a period of one year from date of shipment. DRC's obligation under this warranty is limited to, at DRC's election, furnishing without charge, F.O.B. Wilmington, Massachusetts, a replacement for any defective part or repairing such part.

This warranty does not apply to any product which has been operated at other than specified voltages or currents or which has been subjected to abuse or in which the encoder housing has been opened or where the product has otherwise been tampered with. The foregoing warranty is exclusive and in lieu of all other warranties of quality, whether written, oral or implied.

Installation

The Model 39 may be mounted in any position.

Pin Assignments are shown in table 1. For installation convenience each unit has pin assignments on its cover.

Table 1 — PIN CONNECTIONS FOR MODEL 39

Pin Designation	Units with Sinewave Outputs	Units with Squarewave Outputs	Units with Pulse Outputs
A	Channel A+	Channel A	CW
B	Channel A–	spare	spare
C	Channel B+	Channel B	CCW
D	Channel B–	spare	spare
E	ZR* or spare	ZR* or spare	ZR* or spare
F	ZR* or spare	spare	TEST square wave
I	V+	V+	V+
J	GND	GND	GND

*ZR = Optional Zero Reference Channel

NOTE: Mating Connector, Type MS3106E 18-10S, supplied

Output Load information for 12 and 15 volt units is provided in Fig. 5.

Recommended Couplings for various drive shaft diameters are listed in Table 2.

Table 2 — RECOMMENDED BELLOWS COUPLINGS

Drive Shaft Diameter	Coupling Supplied With	DRC Part Number
1/4"	set screws	B-2152-2
3/8"	set screws	B-2152-4
1/4"	clamps	B-2152-5
3/8"	clamps	B-2152-6

COUPLING CHARACTERISTICS

Torque:	700 oz-in, maximum
Angular misalignment:	15°, maximum
Parallel misalignment:	.032 in., maximum
End-play:	±.050 in., maximum
Wind-up:	5 sec/oz-in. maximum

CAUTION: Care should be taken to regulate the supply voltage within the ±5% specified limits.

Table 3 — PIN CONNECTIONS FOR MODEL 39E/M

CELL OUTPUT		AMP-SHAPER	LOGIC
Pin No.	Functions		
A	CH A+	CH A+	CW+
B	CH A–	CH A–	CW–
C	CH B+	CH B+	CCW+
D	CH B–	CH B–	CCW–
E	CH ZR+	CH ZR+	CH ZR+
F	CH ZR–	CH ZR–	NOTE 1
I	V+	V+	V+
J	GRD	GRD	GRD
G	METRIC	METRIC	METRIC
H	ENGLISH	ENGLISH	ENGLISH

NOTE: 1. Logic units W/O ZR function is "CH B–".
Logic units W/ZR function is "CH ZR–".

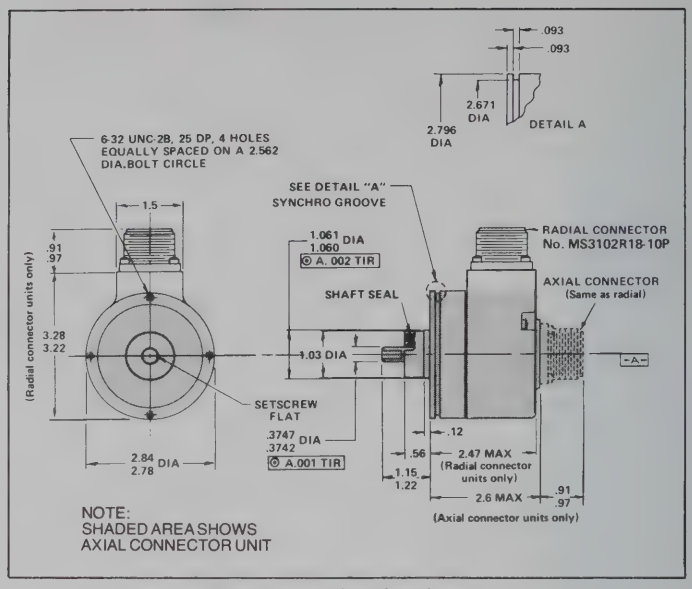

Figure 4 outline drawing

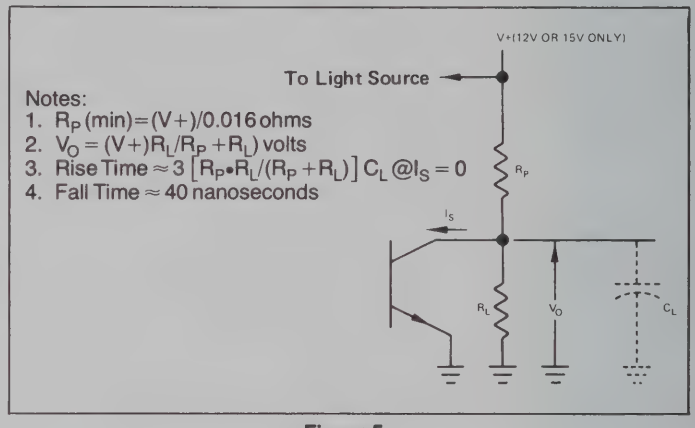

Figure 5

FIGURE 5 — TYPICAL OUTPUT CIRCUIT relates load (R_L) and customer-supplied "Pull-Up" resistor (R_P) for 12 or 15 volt units only. Maximum sink current for 12 or 15 volt operation is 16 milliamperes. Time constant or R_P, R_L and cable capacitance ("C_L") limits maximum value of R_P.

DRC® Dynamics Research Corporation

Components Division
60 Concord Street, Wilmington, MA 01887
Telephone (617) 658-6100/TWX: (710) 347-0299

Models

DRC-77/77 EM

Optical Shaft Angle Encoder for Industrial Applications

Bulletin 12-200

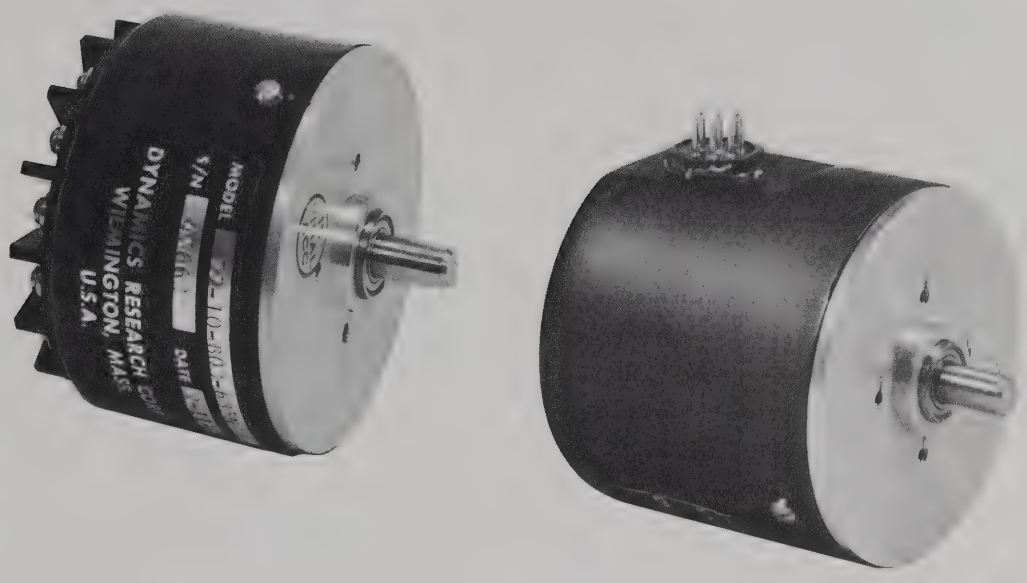

- Our Low Cost Industrial Encoder
- Up to 8,000 Counts per Shaft Revolution
- Single-Voltage Electronics
- Can Drive DTL, TTL, or High Noise Immunity Logic (HTL and MOS)
- Sealed bearings available for maximum reliability

The DRC Model 77, is a compact optical rotary incremental encoder for industrial applications. It is available with discs having up to 2,000 cycles per shaft revolution and with built-in electronics that multiply the basic disc resolution 1, 2, or 4 times to provide up to 8,000 pulses per revolution. Utilizing a line-averaging technique the Model 77 achieves better accuracy and more reliable operation than is provided by single slit type encoders. Customer may select electronics for DTL, TTL or high noise immunity logic (HTL and MOS). Standard 5 or 6 volt units can drive ten or more TTL gates.

Model 77/77 EM Optical Shaft Angle Encoder

Specifications

Performance

Output Channels: Two count channels electrically phased 90° ± 22.5°
One (optional) Zero Reference signal channel as specified below

Count Channel Accuracy
Pulse-to-Adjacent Pulse
Single-Count logic: ± 7.2/N mechanical degrees, maximum
Two-Count logic: ± 15/N mechanical degrees, maximum
Four-Count logic: ± 22.5/N mechanical degrees, maximum

Pulse-to-Any-Other Pulse Pulse-to-Adjacent Pulse accuracy ±22.5/N mechanical degrees, maximum
Note: "N" = cycles/shaft revolution

Count Channel Electrical Phase Relationship: 90° ±22.5°

Count Channel Output Signal Characteristics	**Waveform**	**Signal Levels**
Units without Electronics:	Quasi-Sinewave (Fig. 1)	40 millivolts, P-P minimum, into 2,000 ohms (at 40 kHz)
Units with Amplifier/Shapers:	Square-Wave (Fig. 2)	**5 volt units**—logic "1" = 2.8 v, minimum; Logic "O" = 0.4 v maximum. Minimum load resistance = 1000 ohms; maximum sink current 16 milliamperes.
Units with Pulse Outputs:	Pulse (Fig. 3)	**6 volt units**—Logic "1" = 3.8 v, minimum; Logic "O", load and sink values same as for 5-volt units.
NOTE: Pulse signal levels are same as for square wave units.		**12 and 15 volt units**—Logic "1" defined by Rp (Fig. 5) maximum sink current = 16 milliamperes.

Count Channel DC offest (units without electronics): 10% of P-P signal output, maximum

Rise and Fall Times (units with square-wave or pulse outputs): **(5 and 6 volt units only) 100 ns (no load); 1 μsec** (maximum) into 1000 pF load capacitance (fanout of 2)

Optional Zero Reference Channel Output Signal
Angular Width: 1 ±½ count channel cycle
Amplitude
Units without electronics: 20 millivolts, into 2,000 ohms (See V_{zr}, Fig. 1)
Units with square-wave or pulse outputs: Same as for corresponding count track channels

Frequency Response: 0-40 kHz standard

Temperature: 32°F to 140°F (operating)

Mechanical

Mechanical Shaft speed
Continuous duty: 3000 rpm, maximum
10% duty cycle: 5000 rpm, maximum

Starting torque, maximum at 25° C
Models without sealed bearing: 0.1 oz-in.
Models with sealed bearing: 0.5 oz-in.

Shaft angular acceleration: 10^6 radians /sec², maximum

Shaft inertia: 0.0004 oz-in-sec²

Shaft Loading
Axial: 5 lbs. maximum
Radial (at the end of shaft): 5 lbs. maximum

Connectors: Model 77-1, 6
Connector on encoder: Terminals are provided
Mating connector (supplied): ----
Pin assignments: See Table 2A

Weight: 6 ozs.

Models 77-2, 3, 4, 5
Type Amphenol 126-219
Type Amphenol 126-222
See Table 2B

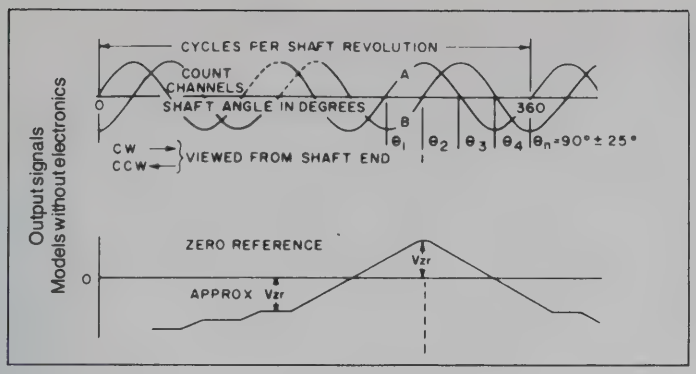

Figure 1

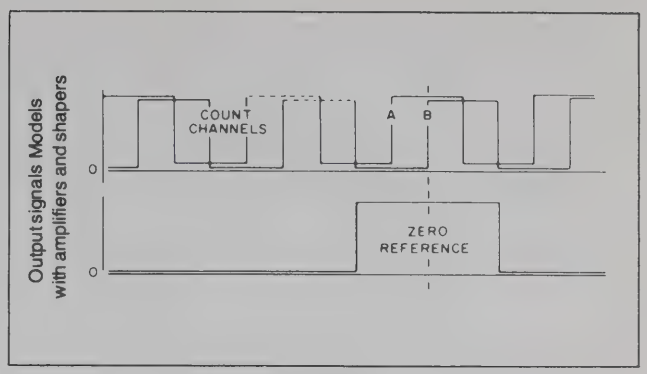

Figure 2

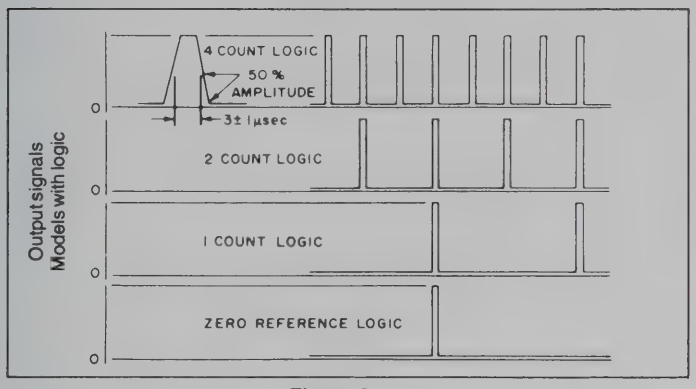

Figure 3

Power Requirements

Table 1-POWER REQUIREMENTS (dc supply voltage regulation: ± 5%)

SUPPLY VOLTAGE	CURRENT REQUIREMENTS (milliamperes)					
	(Units with sine-wave output)		(Units with squarewave output)		(Units with pulse output)	
	No ZR*	ZR*	No ZR*	ZR*	No ZR*	ZR*
+5v	240	360	308	452	364	526
+6v	240	360	325	475	392	566
+12v	120	120	238	262	294	337
+15v	120	120	238	262	not available	

*ZR = Zero Reference Output Channel

Note: Encoders may be operated from negative supplies as long as the more positive line is tied to V+.

How to order

Model No. — — — —

77-Single line count
77E/M Dual track
English/Metric

MOUNT
1=Bolt Circle Mount: plastic cover
2=Synchro Mount: aluminum cover, radial connector
3=Bolt Circle Mount: aluminum cover, axial mount
4=Bolt Circle Mount: aluminum cover, radial connector
5=Synchro Mount: aluminum cover, axial connector
6=Synchro Mount: plastic cover

SEALED BEARING
0=Without sealed bearing
1=With sealed bearing

POWER SUPPLY
A=6v
B=5v
C=12v
D=15v

ZERO REFERENCE
(available on aluminum cover units only):
0=No Zero Ref.
1=With Zero Ref.

OUTPUT CIRCUITRY
0=Cell Output only
1=One-Count Logic*
2=Two-Count Logic*
3=Amplifier/Shaper
4=Four-Count Logic*
*Aluminum cover units, only

CYCLES PER SHAFT REVOLUTION
Standard List follows. Consult factory for other cycles per revolution.

*= no Zero Ref. Track

50*	200	360	600	800
100	225	400	625	900
127*	250	419*	635	1000
128*	256*	450*	707	1024
150*	300*	500	720	1270
160	325*	512	750	1440
				2000

OTHER OPTIONS
X=Customer option described on order

Options available with the Model 77 are visually illustrated by the diagram shown above. Example: a 1024 cycle/shaft revolution unit with bolt circle, aluminum cover, and radial connector, without zero reference, with amplifier/shaper, 12-volt operation and sealed bearings is a **Model 77-41-CO3-1024.** For special options, kindly place an "X" in the last box, then describe your special options on your order.

Model 77 EM line count available

500/1270*
*Zero reference is not available on English/Metric units

Warranty

DRC warrants its products against defects in material and workmanship under normal and proper use and service for a period of one year from date of shipment. DRC's obligation under this warranty is limited to, at DRC's election, furnishing without charge, F.O.B. Wilmington, Massachusetts, a replacement for any defective part or repairing such part.

This warranty does not apply to any product which has been operated at other than specified voltages or currents or which has been subjected to abuse or in which the encoder housing has been opened or where the product has otherwise been tampered with. The foregoing warranty is exclusive and in lieu of all other warranties of quality, whether written, oral or implied.

Installation

The Model 77 may be mounted in any position.

Pin assignments are shown in Tables 2A and 2B. For installation convenience each unit has pin assignments on its cover.

Table 2A – TERMINAL DESIGNATIONS FOR PLASTIC CASE MODEL 77-1.

Terminal Designation	Sinewave Outputs	Squarewave Outputs
2	Chan B+	Chan B
3	Chan B–	spare
4	GND	GND
5	Chan ZR+*	Chan ZR* or spare
6	Chan ZR–*	spare
7	Chan A–	spare
8	Chan A+	Chan A
10	V+	V+

Table 2B – CONNECTOR PIN DESIGNATIONS FOR MODELS 77-3 AND 77-4

Pin Designation	Sinewave Outputs	Squarewave Outputs	Pulse Outputs
A	Chan A+	Chan A	CW
B	Chan B+	Chan B	CCW
C	Chan ZR+*	Chan ZR* or spare	ZR* or spare
D	GND	GND	GND
E	Chan B–	spare	spare
H	V+	V+	V+
J	Chan ZR–*	spare	spare
K	Chan A–	spare	spare

*ZR = Optional Zero Reference Output Signal

Output load information for 12- and 15-volt units is provided in Figure 5.

Recommended couplings for various shaft diameters are listed in Table 3.

Table 3 – RECOMMENDED BELLOWS COUPLINGS

Drive Shaft Diameter	Coupling Supplied With	DRC Part Number
¼"	clamps	B-2152-1
¼"	set screws	B-2152-9
3/16"	clamps	B-2152-3
3/8"	set screws	B-2152-2
3/8"	clamps	B-2152-5

Table 3A – PIN CONNECTIONS FOR MODEL 77 EM

Models 77-2 thru 77-5	Models 77-1 and 77-6	Square Wave or Pulse Outputs
Pin	Terminal	Function
A	8	CH. A or CW
B	2	CH. B or CCW
H	10	V+
D	4	GND
J	1	ENGLISH
G	6	METRIC

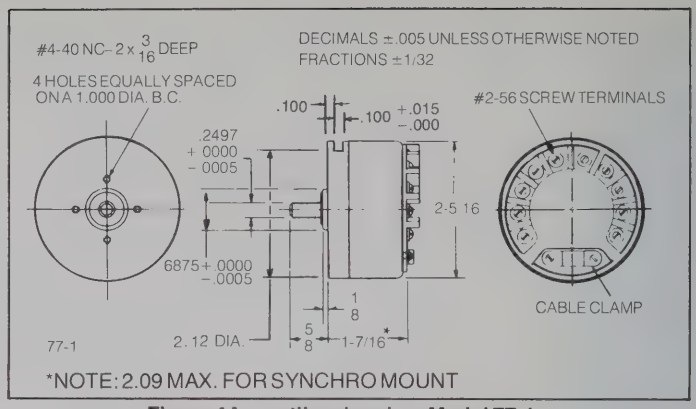

Figure 4A—outline drawing, Model 77-1

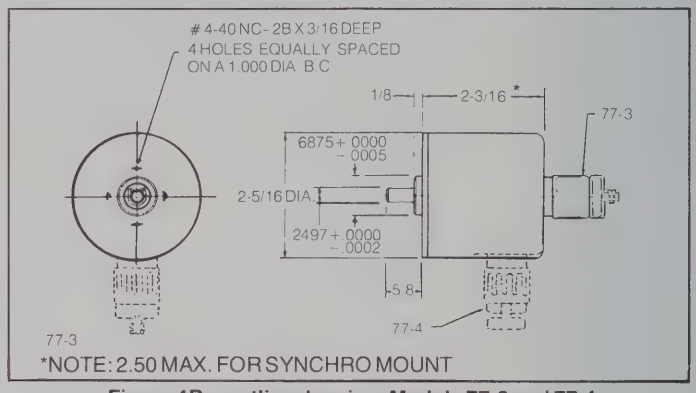

Figure 4B—outline drawing, Models 77-3 and 77-4

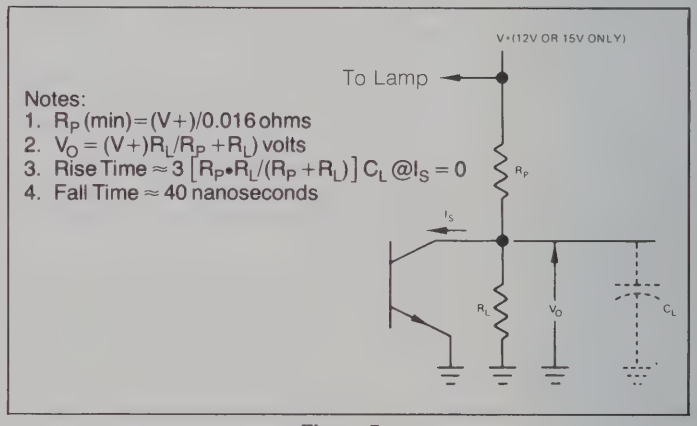

Figure 5

FIGURE 5 — TYPICAL OUTPUT CIRCUIT relates load (R_L) and customer-supplied "Pull-Up" resistor (R_P) for 12 or 15 volt units only. Maximum sink current for 12 or 15 volt operation is 16 milliamperes. Time constant of R_P, R_L and cable capacitance ("C_L") limits maximum value of R_P.

DRC® Dynamics Research Corporation

Components Division
60 Concord Street, Wilmington, MA 01887
Telephone (617) 658-6100/TWX: (710) 347-0299

Models

DRC-150/152

Low-Cost, Miniature, Optical Incremental Encoder

Bulletin 12-100

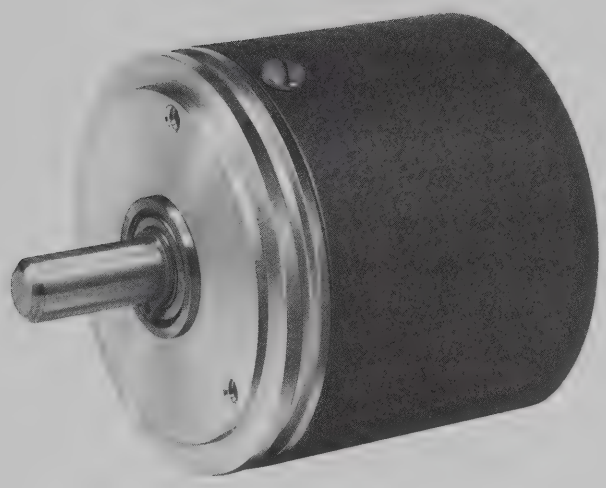

- OUTPUT—up to 1200 cycles/revolution; single or dual channel sine waves or square waves; index pulse available.
- SOLID-STATE RELIABILITY—solar cell or TTL outputs; LED light source.
- COMPACT—small outline enables versatile system packaging.
- MOUNTING—integral bolt-circle and synchro grooves enable choice of mounting.
- QUALITY CONSTRUCTION—heavy-duty shaft/bearing assembly; all metal housing.
- LOW COST—attractively priced for high-volume usage.

The 150/152 series are quality, optical incremental encoders created specifically for applications where low cost and small size are paramount considerations to the volume user. A heavy-duty, $\frac{1}{4}$ inch shaft and bearing assembly assures excellent life and reliability at operating speeds up to 3000 RPM, with shaft loading of up to 5 lbs.

Mounting is facilitated by an integral bolt circle and synchro groove. Small size ($1\frac{5}{8}$" diameter x $1\frac{1}{2}$" length) permits utilization in restricted space. An extremely competitive price makes the Model 150 particularly attractive to the systems designer. Numerous useful options are available—please review the specifications listed on the reverse side.

MODEL 150 OUTPUTS

Parameter	Test Condition	Specification
Peak-to-peak Output voltage	32° to 120° F 2000 ohm load, 1000 Hz	50MV typical, 40MV Min
Output amplitude modulation	2000 ohm load	15% maximum (of peak-to-peak output)
D.C. offset	32° to 120° F, 1000 Hz	±10% (of peak-to-peak output)
Interchannel Phasing (dual channel unit)	32° to 120° F 2000 ohm load, 0-40 Khz	90° ± 30°

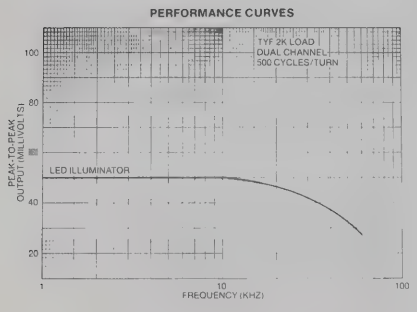

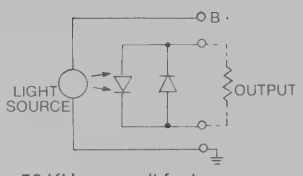

>50 KHz, consult factory

MODEL 152 OUTPUTS

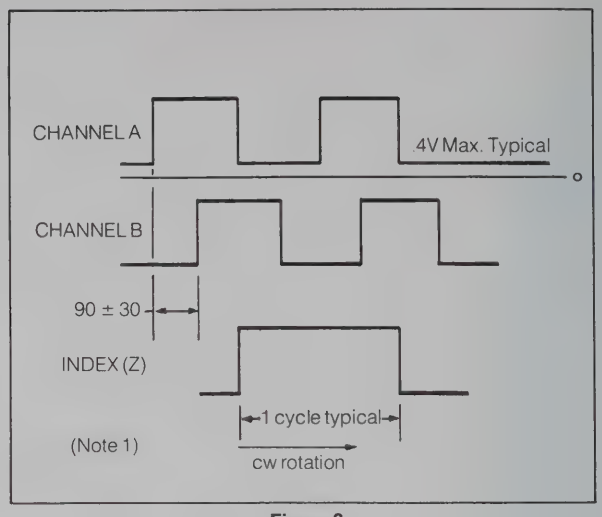

Figure 8

Note 1 – There is no specified alignment between index and channels
Index is typically 1 ± ½ cycle wide @ 1KHz channel frequency rate

Note 2 – Typical out-put for index and channels is shown below. Guaranteed base line level .4V max.

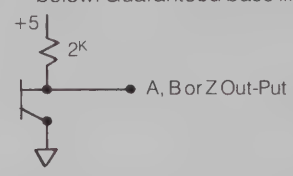

Specifications to change without notice.

Wiring Connections		
FUNCTION	MODEL 150	MODEL 152
Channel A +	Orange	Brown
Channel A –	Green	Brown/White
Channel B +	Yellow	Green
Channel B –	Blue	Green/White
Channel ZR +	Gray	Orange
Channel ZR –		Orange/White
+ 5VDC	Red	Red
Common	Black	Black

SPECIFICATIONS

Mechanical

Size:	refer outline drawing
Weight:	4 oz.
Starting Torque:	standard bearings, <0.1 oz.-in. sealed bearings <0.5 oz.-in.
Shaft Loading:	5 lbs. axial and radial
Operating Speed:	3000 rpm continuous 5000 rpm at 10% duty cycle
Inertia:	Less than 0.0001 oz-in-sec2
Mechanical Accuracy:	15 arc mins. p-p typical

Electrical

Excitation:	5.0 volts d.c. ± 5% 100 milliamps nominal current
Output:	Quasi-sinusoid or square wave single channel or dual channels in quadrature. Channel A leads Channel B for CW rotation as viewed from shaft end. Index pulse optional: 1 ± ½ cycle wide

Optical

Light Source:	Light emitting diode
Light Sensor:	Silicon photocell (balanced pair)
Index Pulse:	Single ended phototransistor

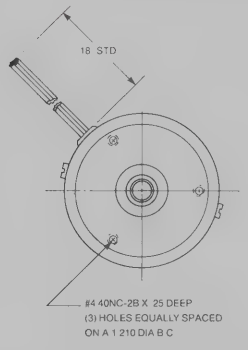

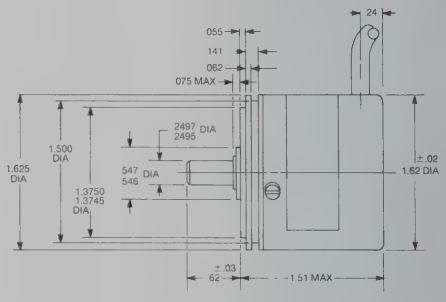

HOW TO ORDER

Model No. ◯ ◯ ◯ ◯ ◯ ◯ ◯ – X (Modifiers)

MODEL 150
MODEL 152

0 = standard bearing
1 = sealed bearing

1 = 1 count channel
2 = 2 count channel in quad

0 = No Index
1 = Index

18 = 18" Leads
36 = 36" Leads

U = Unshielded
S = Shielded

CYCLES PER SHAFT REVOLUTION
Standard List follows; consult factory for the line counts:

100	200	416	647	1000	1200
127	250	500	832	1024	

Line Counts – To 1200 max.

WARRANTY

DRC warrants its products against defects in material and workmanship under normal and proper use and service for a period of one year from date of shipment. DRC's obligation under this warranty is limited to, at DRC's election, furnishing without charge, F.O.B. Wilmington, Massachusetts, a replacement for any defective part or repairing such part.

This warranty does not apply to any product which has been operated at other than specified voltages or currents or which has been subjected to abuse or in which the encoder housing has been opened or where the product has otherwise been tampered with. The foregoing warranty is exclusive and in lieu of all other warranties of quality, whether written, oral or implied.

DRC
Dynamics Research Corporation
Precision Measurement Division
60 Concord Street, Wilmington, MA 01887
Telephone (617) 658-6100/TWX: (710) 347-0299

Models

DRC TK710/720

Pulstac™ Modular Optical Tachometer

Bulletin 4-100

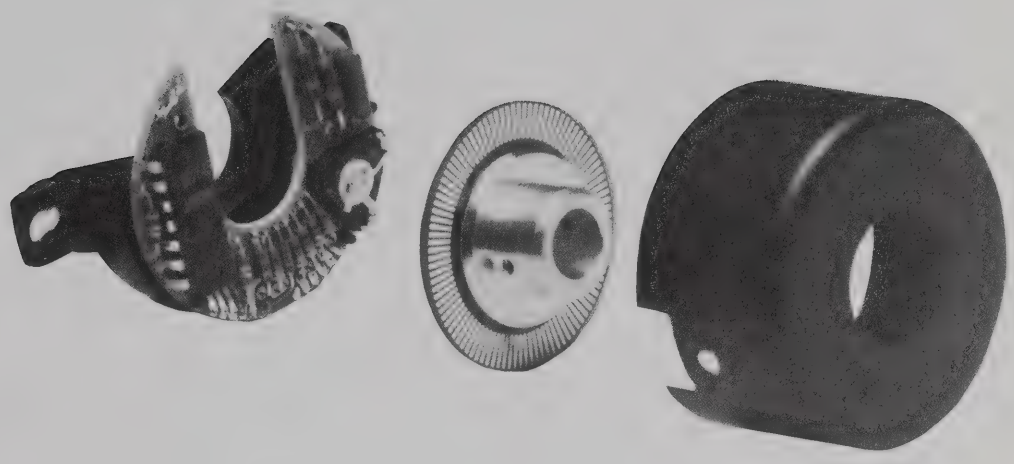

The Pulstac Optical Tachometer provides a digital means of sensing velocity or position without the shaft coupling and bearings of a conventional incremental encoder. The TK710 and the TK720 can be used with low inertia motors, DC torque motors and stepper motors.

Standard Features

- Reticle height is constant for any read head. Allows preassembly of hub and disc to motor shaft and permits interchangeability of heads without removing disc.
- Sine or T^2L compatible square wave out in the same package size.
- Completely solid state – illuminator and sensors.

Optional Features

- Split cover is side mounted for applications where overhead space is limited.
- Low inertia 1×10^{-5} oz. – in. sec^2 for optimum system responses.
- Prephase – Tach completely factory phased ready for installation. Prephase is fully recoverable. No pieces to throw away or lose.

Sine Wave TK710

Channels out-put V_{pp} = 40mv Min. into 2K Load @ 10KHZ

DC Offset = 10% of V_{pp} out-put MAX. $= \frac{(V_{pp} - 2V_p)}{(2\ V_{pp})} \times 100$

AM Modulation = 10% of pp out-put $= \frac{b}{V_{pp} - 2b}$ See fig. 2

Phasing CHA to CHB = 90° ± 30

Maximum operating frequency = 40 KHZ

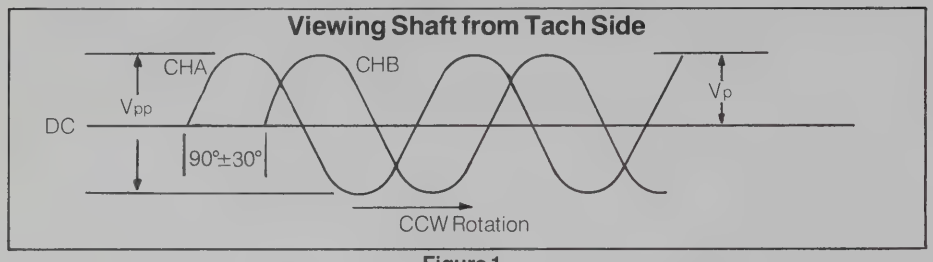

Figure 1

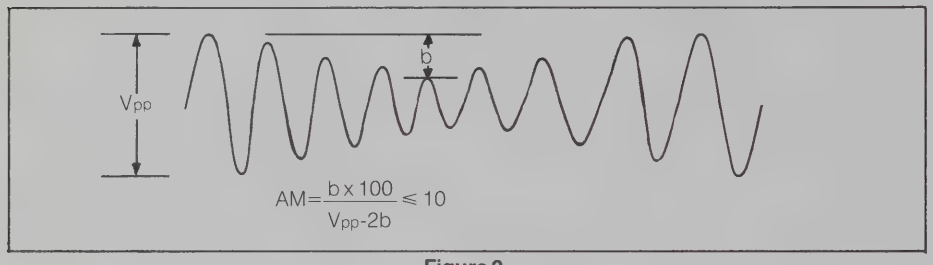

Figure 2

Index

Out-put into 5K load – see fig. 3

Max. operating speed as a function of count channel = 4 OKHZ

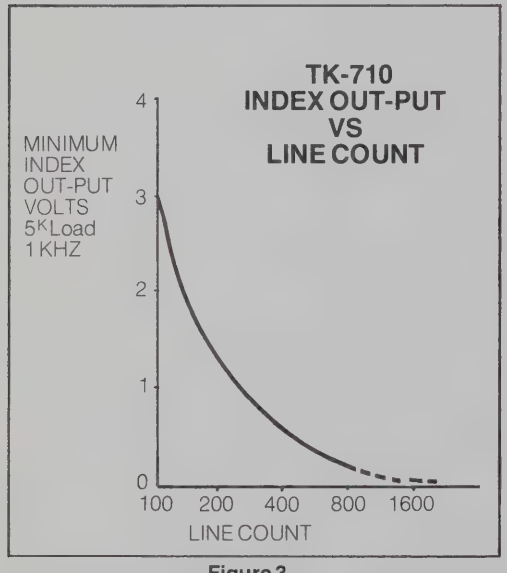

Figure 3

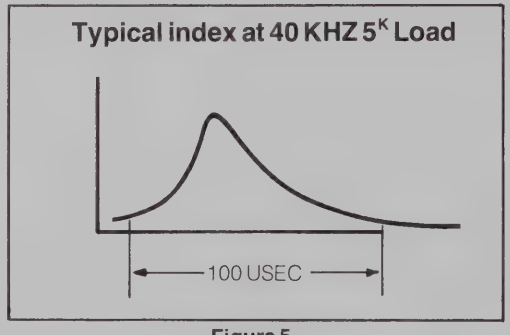

Figure 5

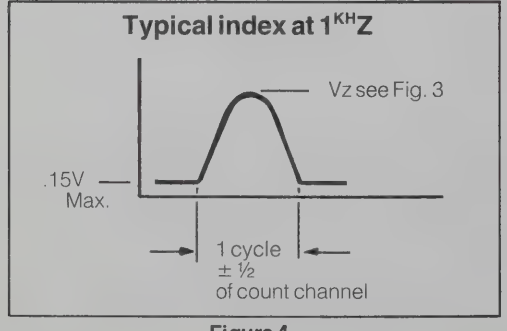

Figure 4

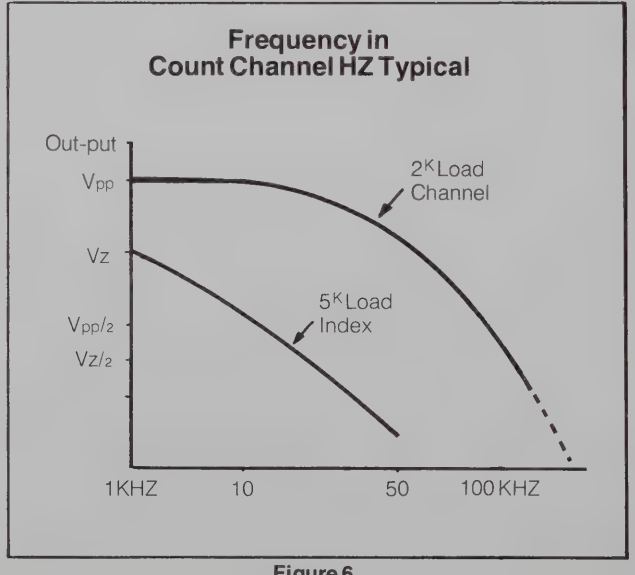

Figure 6

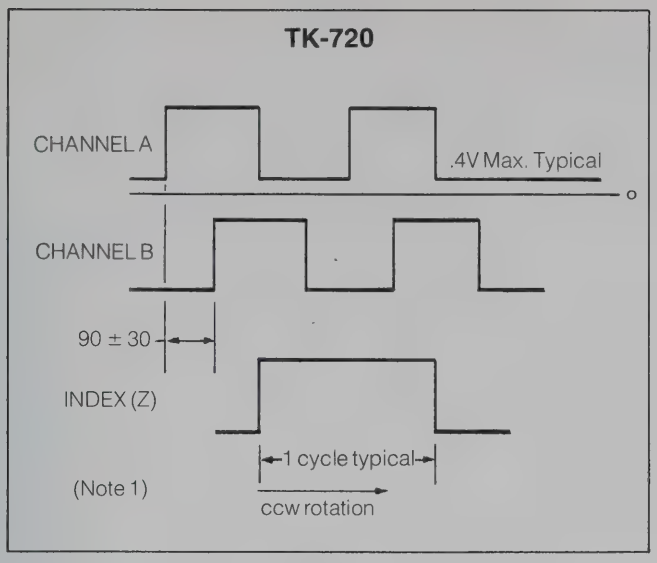

Figure 8

Note 1 – There is no specified alignment between index and channels
Index is typically 1 ± ½ cycle wide @ 1KHz channel frequency rate

Note 2 – Typical out-put for index and channels is shown below. Guaranteed base line level .4V max.

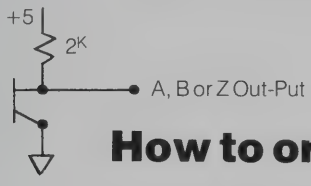

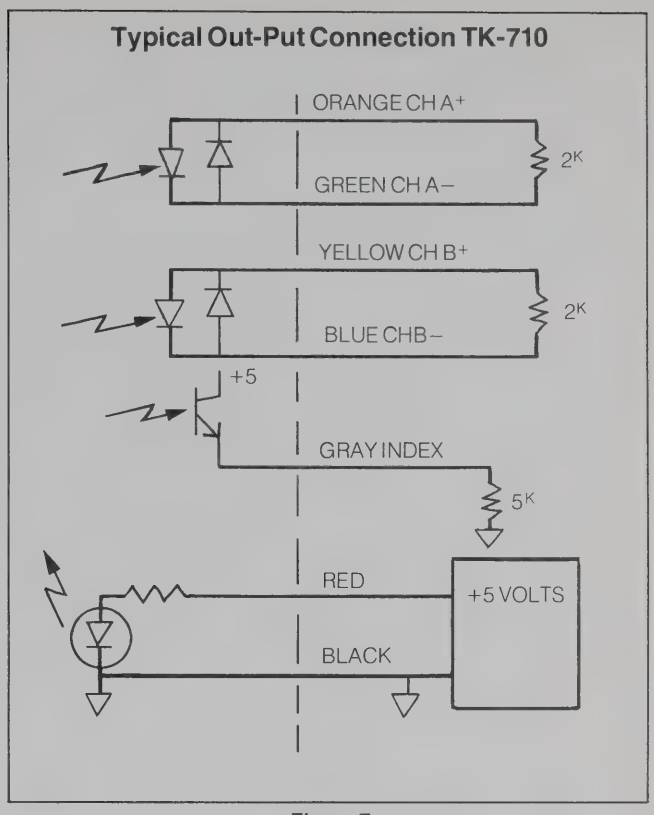

Figure 7

How to order

TK720 square wave
TK710 sine wave

- 1=⅛" shaft
  2=¼" shaft
  3=⅜" shaft
  4=½" shaft
- 1=1 count channel
  2=2 count channel in quad
- 0=No Index
  1=Index
- CYCLES PER SHAFT REVOLUTION
  Standard List follows; consult factory for the line counts:

100	200	416	647	1000	1200
127	250	500	832	1024	

- 18=18" Leads
  36=36" Leads
- — X (Modifiers)
  U=Unshielded
  S=Shielded

Line Counts – To 1200 max.

Modifications

A=Split Cover
B=Low Inertia
C=.3152/.3157 Dia. Hub
D=Prephase

Warranty

DRC warrants its products against defects in material and workmanship under normal and proper use and service for a period of one year from date of shipment. DRC's obligation under this warranty is limited to, at DRC's election, furnishing without charge, F.O.B. Wilmington, Massachusetts, a replacement for any defective part or repairing such part.

This warranty does not apply to any product which has been operated at other than specified voltages or currents or which has been subjected to abuse or in which the encoder housing has been opened or where the product has otherwise been tampered with. The foregoing warranty is exclusive and in lieu of all other warranties of quality, whether written, oral or implied.

Specifications

- **Low Inertia:** $1X10^{-5}$ oz-u sec^2
- **Flutter:** Less than 1% peak-to-peak (once per revolution)
- **Inertia:** Less than 0.0001 oz. -in. $-sec_2$
- **Height (overall):** .80 inch, standard
- **Outside Diameter:** 1.53 inches, standard

Hub Diameter: Nominal + .0002
+ .0005 (i.e. .3752/.3757)
Allowable Shaft Runout: 0.001 inch TIR, maximum, at the disc
Allowable Shaft Perpendicularly: 0.001 inch with respect to photohead mounting surface
Required Shaft Mounting Length: 0.90" minimum
Shaft End Play: 0.001 inch, maximum
Gap between Disc and Reticle: 005 See Fig. 9
Specifications subject to change without notice.

Installation

General

1. **Handling the disc** – Care should be used in handling the disc. The best precaution is to wear finger cots or cotton gloves. Hold the disc by the edges only or by the hub. Finger prints are difficult to remove and could affect performance.
2. **Cleaning the disc** – The tachometer disc is made from photoemulsion coated glass. Denatured alcohol may turn disc white. Cleaning should be done with acetone or freon and a cotton swab.
3. **Set Screw** – Although a set screw is provided to hold the disc assembly to the motor shaft, most users bond the disc hub to the motor shaft. Therefore, the set screw locates and holds the unit in position while the bonding agent sets.
4. **Bonding Agent** – Select the bonding agent according to your application requirements but do not use a material that sets quickly.

Mounting the tach

The height of the reticle in the read head assembly is precisely set at the factory. (see fig. 1.) so that once installed all read heads are interchangeable without removing the disc.

Installation

A. Apply bonding agent to motor shaft per bonding agent manufacturers instructions.

B. Slide hub and disc assembly onto shaft with set screw away from motor. Set disc height at .240 $^{+.003}_{-.001}$. A suggested fixture can be purchased from Dynamics Research. Hold the disc lightly against the fixture and tighten the set screw. As an alternate a .005 plastic shim may be used to set disc height.

A. Single channel – Connect the tachometer leads per accompanying table. Connect a 2,000 Ohm load between output leads and observe output signal on an oscilloscope while performing the following step. Manually rotate motor and check for clearance.

With the unit energized, rotate the motor slowly and observe the output amplitude on the oscilloscope. Loosen the 4-40 photohead mounting screws just enough to permit lateral motion within hole clearances (but not enought to let disc touch reticle), and move the photohead within the screw hole clearances to maximize the signal amplitude. Tighten the mounting screws and lock them in place with epoxy cement.

Stop motor.

Place cover in position and secure with screws provided.

B. Dual channel – Connect a 2,000 ohm load to each pair of out-put leads (orange-green) and (yellow-blue). Ground the green and blue leads to the oscilloscope ground. Rotate the motor counter clockwise as viewed from the tach side.

Energize the tach and set the oscilloscope to trigger on the orange (CH.A) lead. one full cycle of the sine wave equal to 10cm on the oscilloscope. (See fig. 1). Loosen the 4-40 mounting screws. Adjust the read head so that the yellow (CHB.) lead appears as shown in fig. 1. Maximize the out-puts maintaining the phasing of fig. 1. Tighten mounting screws and lock them in place with epoxy cement.

Stop motor.

Place cover in position and secure with screws provided.

C. Units with index – Connect a 5000 ohm load from the index out-put to ground. Rotate the motor CCW loosen the 4-40 mounting screws and maximize the index out-put. Adjust head for single and dual channel per A or B above maintaining good index out-put.

Phasing TK-720

A. Single channel – Rotate motor CCW viewing tach side. Set motor at 100 RPM. Energize the tach. Set an oscilloscope sweep to 10cm for full tach cycle see fig. 8. Loosen mounting screws and adjust head to obtain a symmetrical wave form of fig. 8. Recheck at 100 RPM. Tighten mounting screws and lock them in place with epoxy cement.

Stop motor before installing cover.

B. Dual channel – Set up same as A above. Readjust head at maximum operating speed if necessary to obtain phasing as shown in fig. 8.

C. Units with index – Set up same as A or B above set index for 1½ cycle at 100 RPM. Readjust if necessary at maximum operating speed. Note maximum index operation is 40 KHZ count channel frequency i.e. 2400 RPM for a 1000 line tach.

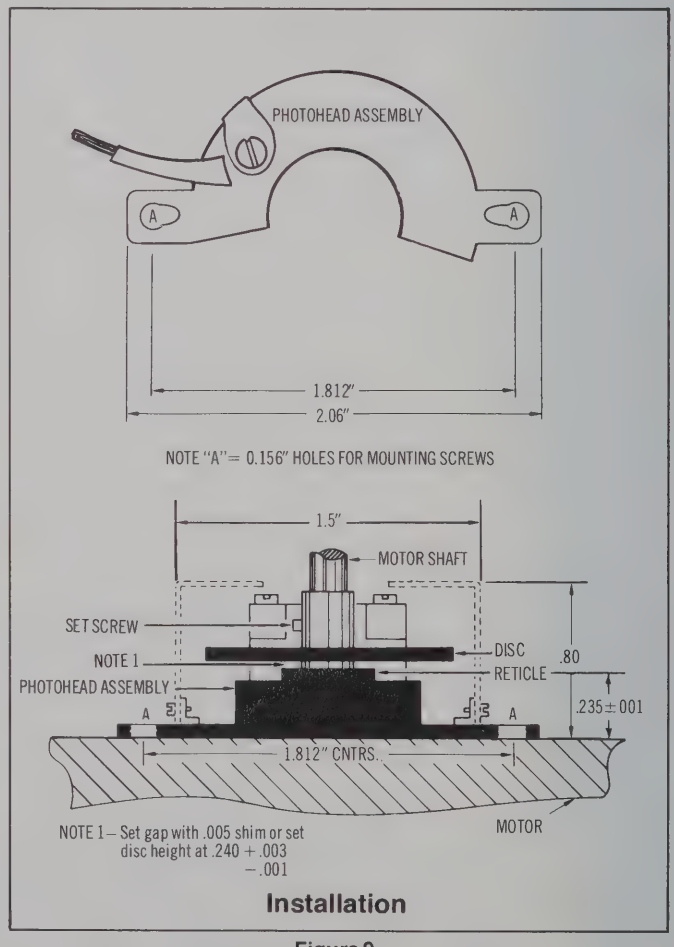

Installation

Figure 9

Dynamics Research Corporation

Components Division
60 Concord Street, Wilmington, MA 01887
Telephone (617) 658-6100/TWX: (710) 347-0299

Models

LMS 50/100/500

High Performance Linear Encoders

Bulletin 12-900

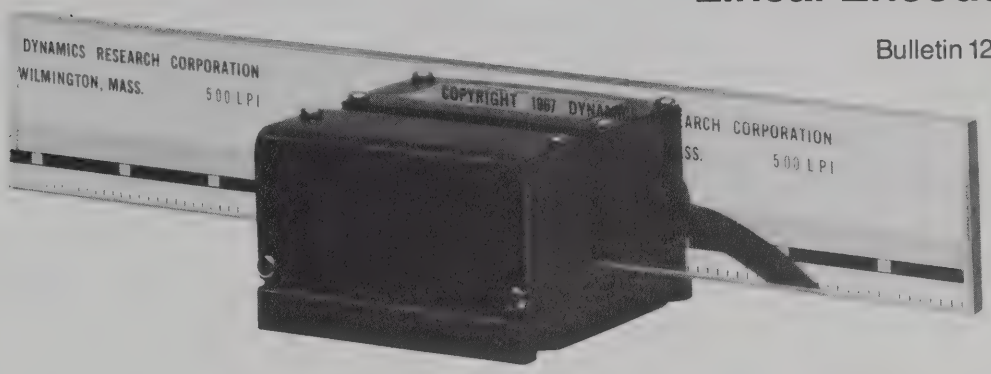

LMS 50/100

- High Accuracies . . . to 50 microinches per foot traceable to N.B.S.
- High-Resolutions . . . to 50 microinches or 1 micron
- High-Reliability . . . ruggedized Metrifilm™ glass scale
- Non-Contacting . . . no mechanical wear assures continued accuracy
- Easy Alignment . . . unique optical system permits easy alignment at those high resolutions
- Simplicity . . . easily installed and maintained
- High Speed . . . measures at rates up to 20 inches per second
- Integral Amplifier/Shaper . . . provides TTL compatible squareware output

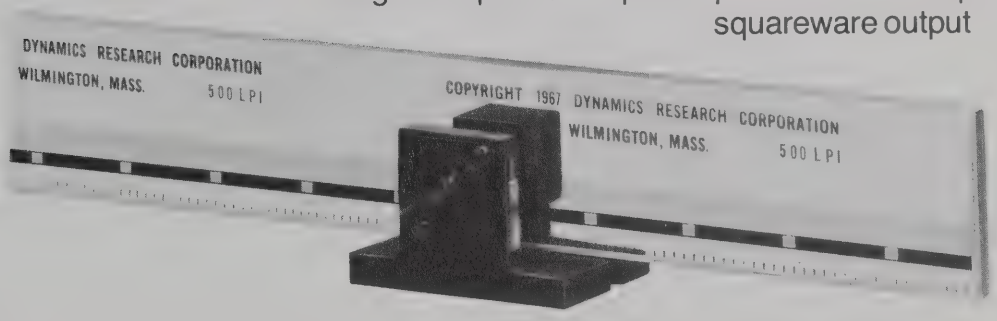

LMS 500

- Accuracy . . . 250 microinches per foot traceable to N.B.S.
- Resolution . . . 500 microinches or 10 microns
- High Reliability . . . ruggedized Metrifilm glass scale
- Reference Signals . . . beginning and end of travel signals (as well as other combinations)
- Non-Contacting . . . no mechanical wear assures long life, continuing accuracy
- Compact . . . L-5A head envelope approximately two cubic inches
- High Speed . . . measures at rates up to 100 inches per second

LMS 50/100

General Description

The LMS 50/100 Series are high-resolution, high-precision, linear encoders with resolutions up to 50 microinches and accuracies up to 50 μ in./ft. Metric versions are also available with resolutions up to 1 micron. These encoders consist of a precision scale and a non-contacting optical/electronic reading head. The scale, up to 52 inches in length, is finely divided into thousands of vertical, parallel lines, which are vacuum-deposited Inconel on transparent glass – our exclusive Metrifilm process. The read head translates linear motion into TTL-compatible, quadrature squarewaves for bi-directional sensing.

Operation

The unique technique employed with the LMS 50/100 Series consists of using a collimated light source to optically superimpose one portion of scale rulings over another to produce an interference pattern which is detected by Silicon photocells. (Fig. 1). Since the imaged lines move in the opposite direction to the scale, the effect is optically double the number of scale lines sensed. Additionally, this optical system makes the orientation of the scale to head virtually immune to pitch, and noncritical to gap variation—this results in easy alignment. With the aid of external X4 logic, the ultimate count, in the case of the LMS-100, is 8 times the number of scale lines or 10000/in. In the case of the LMS-50, there is in addition, a stage of electronic frequency doubling which produces an ultimate resolution of 16 times the number of scale lines sensed. (Fig. 2).

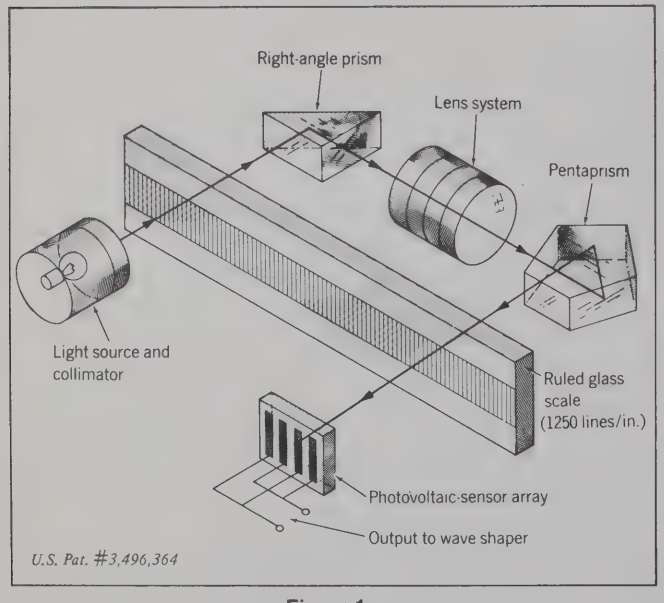

Figure 1

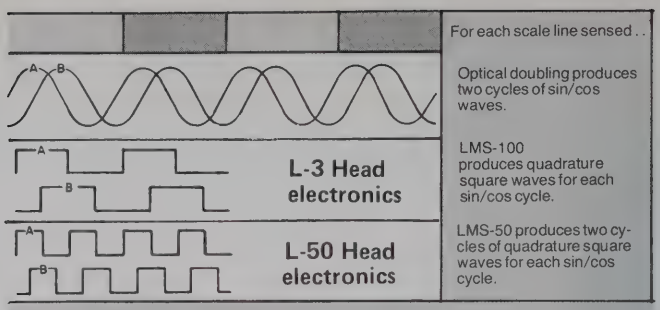

SYSTEM RESOLUTION: Employing the X4 logic of an external circuit 8 counts are produced in the LMS-100 system, and 16 counts are produced in the LMS-50 system for each scale line sensed.

Figure 2

LMS 500

General Description

The LMS-500 Series is an optical/electronic measuring system which provides high-quality, linear incremental encoding at a modest price. Precision glass scales with Metrifilm graduations (metalized pattern on glass substrate) are available to produce system resolutions of 500 microinches for English measurements, or 10 microns for Metric measurements. Compact, easily installed encoder heads provide cell outputs. The non-contact feature of these optical systems assures years of wear-free service. Specially designed for quick, easy installation, set-up is uncomplicated – maintenance minimal. Applications include: • machine-tool readouts and feedback control loops • PC and microcircuit artwork generation • Inspection systems and • General metrology.

Operation

Measurement of linear motion can be accomplished in one of two ways: (1) moving the glass scale through the stationary encoder head, or (2) moving the encoder head along the stationary scale. In either case, the relative motion produces a pattern, as collimated light from one side of the encoder head, passed through the fine graduations on the glass scale and graduated reticle on the opposite side of the head (Fig. 3). This light and dark pattern is sensed by pairs of photo cells, placed back to back, to minimize DC offset and enhance signal output.

The compact encoder head, equipped with cell output only, converts linear motion into low-level sin/cos waves. Their zero crossings can be converted into digital signals for incremental counting. By assigning channel designations to both sine and cosine waves, a phase relationship is established for determining direction. Finally, separate patterns on the scale can produce reference signals which are used to determine beginning and/or end of travel. Representative wave forms are shown in Fig. 4.

Employing external X4 logic circuitry, system resolutions of 500 microinches (English) or 10 microns (Metric) are obtained.

SELECTION CRITERIA		Head Assembly	Scale Density (lines/in.)	Output (cycles/in.)	Resolution[2] (μin.)	Accuracy (μin./ft.)
ENGLISH	LMS-50	L-50	1250	5000	50	50
	LMS-100	L-3	1250	2500	100	100
	LMS-500	L5-A	500	500	500	250
METRIC			(Lines/mm)	(Cyles/mm)	(μm)	(μm/25.4cm)
	LMS-1M	L-50	62.5	250	1	1.25
	LMS-2M	L-3	62.5	125	2	2.5
	LMS-10M	L5-A	25	25	10	5

NOTE 1: Scales are provided as a one-piece section, and reading lengths are selectable in increments of 1 inch up to 50 inches for English systems and in increments of 1 cm up to 127 for Metric systems. Add 2 inches to overall reading length requirement to accommodate encoder head sensing area.

NOTE 2: Indicated resolution is attained when encoder output is fed into external X4 logic circuitry.

Specifications

Electrical

Signal: Two-Channel, Quadrature Square Waves

Slew Rate: LMS 50/100 20 in./sec max.

Levels: Logic 0: 0.4 VDC max.
Logic 1: 3.5 VDC min.

Rise Time: 1 μsec (10% to 90%)

Interchannel Phasing: 90±45 electrical degrees

Excitation:
L-50 { +5.5 VDC ±2% @ 250ma
−5.5 VDC ±2% @ 100ma
L-3 +5 VDC ±2% @ 400ma

Output: LMS-50: IC gate with 51 ohm output impedance; short-circuit and reverse voltage protection.
LMS-100: IC gate with 150 ohm output impedance; short circuit protection.

Environmental

Operating Temperature: +30°F to +100°F

Storage Temperature: −10°F to +150°F

Specifications

Electrical

Output Type Two channel, sin/cos wave

Slew Rate: 100 in./sec

Output Levels 25 mv min. P-to-P into 2K load, maximum DC offset ± 10% of P-to-P at 5 KHz.

Interchannel Phasing 90°±30°

Excitation +5 VDC ±5%, 125 ma

Reference Signal (optional) 10 mv min. into 2K load (5 mv min. above 0 VDC)

LMS 50/100

General Description

The LMS 50/100 Series are high-resolution, high-precision, linear encoders with resolutions up to 50 microinches and accuracies up to 50 μ in./ft. Metric versions are also available with resolutions up to 1 micron. These encoders consist of a precision scale and a non-contacting optical/electronic reading head. The scale, up to 52 inches in length, is finely divided into thousands of vertical, parallel lines, which are vacuum-deposited Inconel on transparent glass – our exclusive Metrifilm process. The read head translates linear motion into TTL-compatible, quadrature squarewaves for bi-directional sensing.

Operation

The unique technique employed with the LMS 50/100 Series consists of using a collimated light source to optically superimpose one portion of scale rulings over another to produce an interference pattern which is detected by Silicon photocells. (Fig. 1). Since the imaged lines move in the opposite direction to the scale, the effect is optically double the number of scale lines sensed. Additionally, this optical system makes the orientation of the scale to head virtually immune to pitch, and noncritical to gap variation—this results in easy alignment. With the aid of external X4 logic, the ultimate count, in the case of the LMS-100, is 8 times the number of scale lines or 10000/in. In the case of the LMS-50, there is in addition, a stage of electronic frequency doubling which produces an ultimate resolution of 16 times the number of scale lines sensed. (Fig. 2).

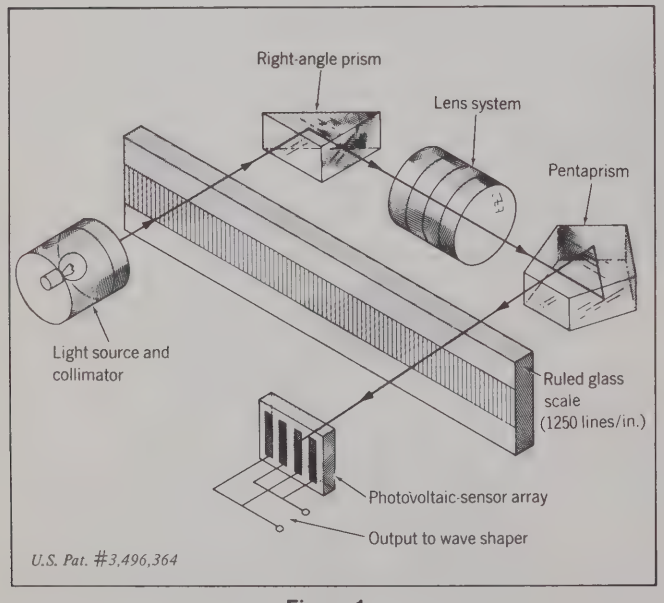

Figure 1

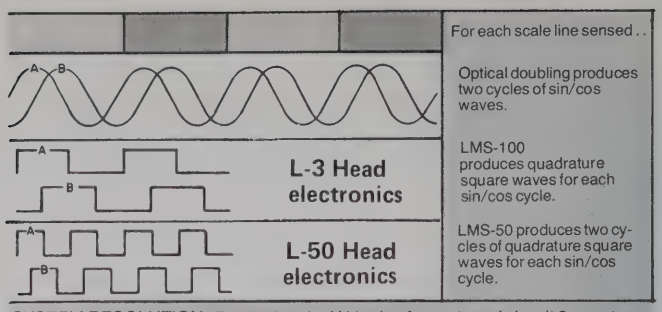

SYSTEM RESOLUTION: Employing the X4 logic of an external circuit 8 counts are produced in the LMS-100 system, and 16 counts are produced in the LMS-50 system for each scale line sensed.

Figure 2

LMS 500

General Description

The LMS-500 Series is an optical/electronic measuring system which provides high-quality, linear incremental encoding at a modest price. Precision glass scales with Metrifilm graduations (metalized pattern on glass substrate) are available to produce system resolutions of 500 microinches for English measurements, or 10 microns for Metric measurements. Compact, easily installed encoder heads provide cell outputs. The non-contact feature of these optical systems assures years of wear-free service. Specially designed for quick, easy installation, set-up is uncomplicated – maintenance minimal. Applications include: • machine-tool readouts and feedback control loops • PC and microcircuit artwork generation • Inspection systems and • General metrology.

Operation

Measurement of linear motion can be accomplished in one of two ways: (1) moving the glass scale through the stationary encoder head, or (2) moving the encoder head along the stationary scale. In either case, the relative motion produces a pattern, as collimated light from one side of the encoder head, passed through the fine graduations on the glass scale and graduated reticle on the opposite side of the head (Fig. 3). This light and dark pattern is sensed by pairs of photo cells, placed back to back, to minimize DC offset and enhance signal output.

The compact encoder head, equipped with cell output only, converts linear motion into low-level sin/cos waves. Their zero crossings can be converted into digital signals for incremental counting. By assigning channel designations to both sine and cosine waves, a phase relationship is established for determining direction. Finally, separate patterns on the scale can produce reference signals which are used to determine beginning and/or end of travel. Representative wave forms are shown in Fig. 4.

Employing external X4 logic circuitry, system resolutions of 500 microinches (English) or 10 microns (Metric) are obtained.

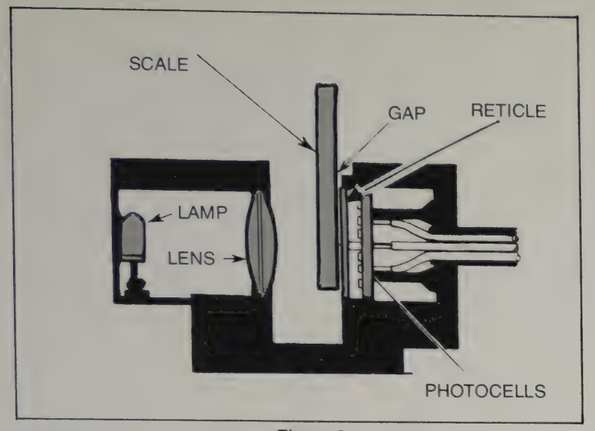

Figure 3

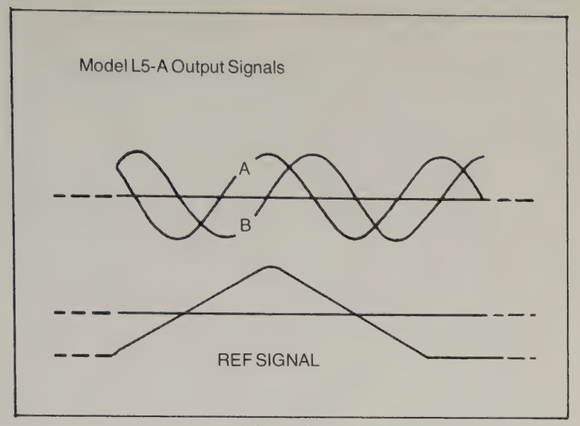

Figure 4

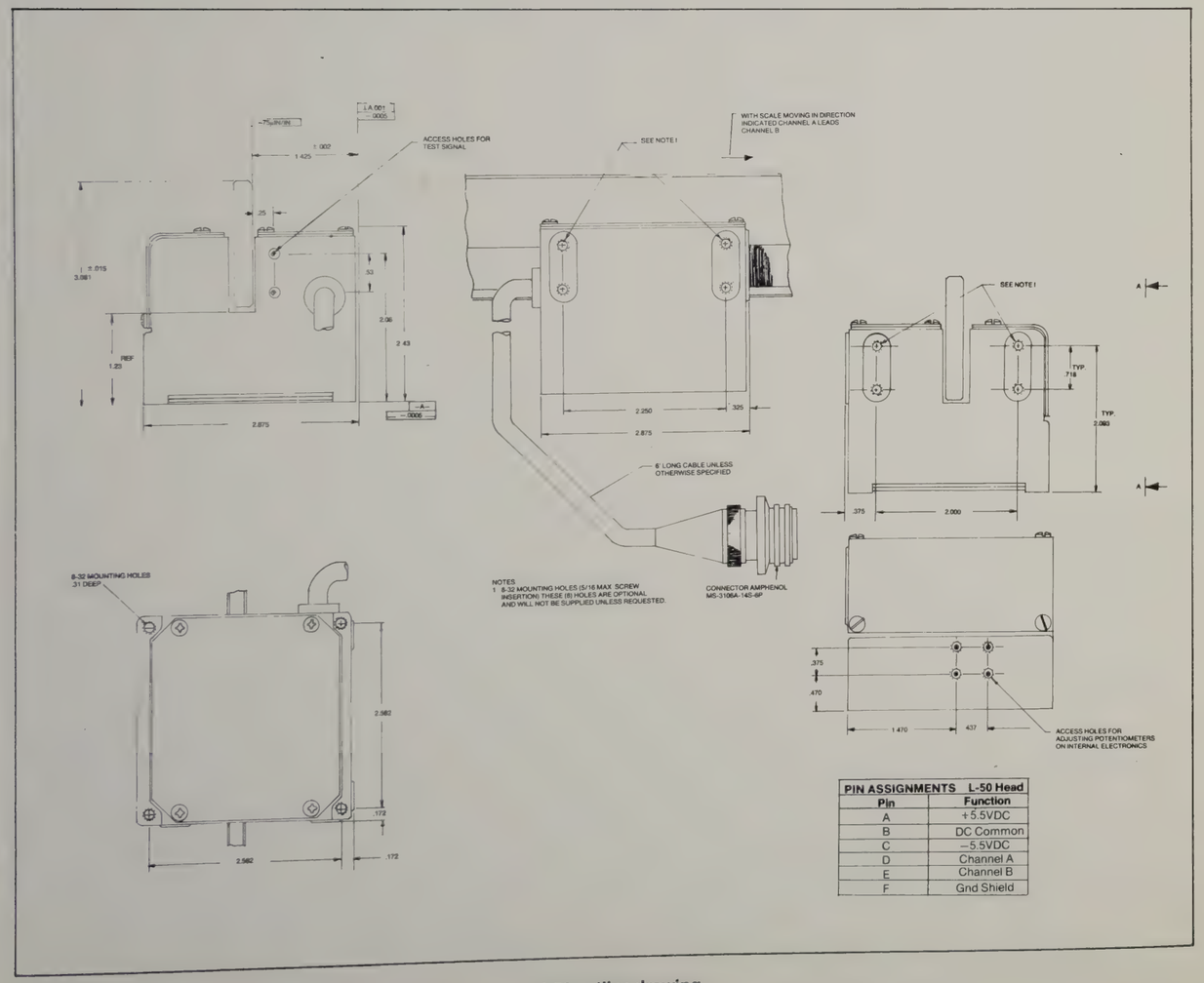

PIN ASSIGNMENTS	L-50 Head
Pin	Function
A	+5.5VDC
B	DC Common
C	−5.5VDC
D	Channel A
E	Channel B
F	Gnd Shield

L50 outline drawing

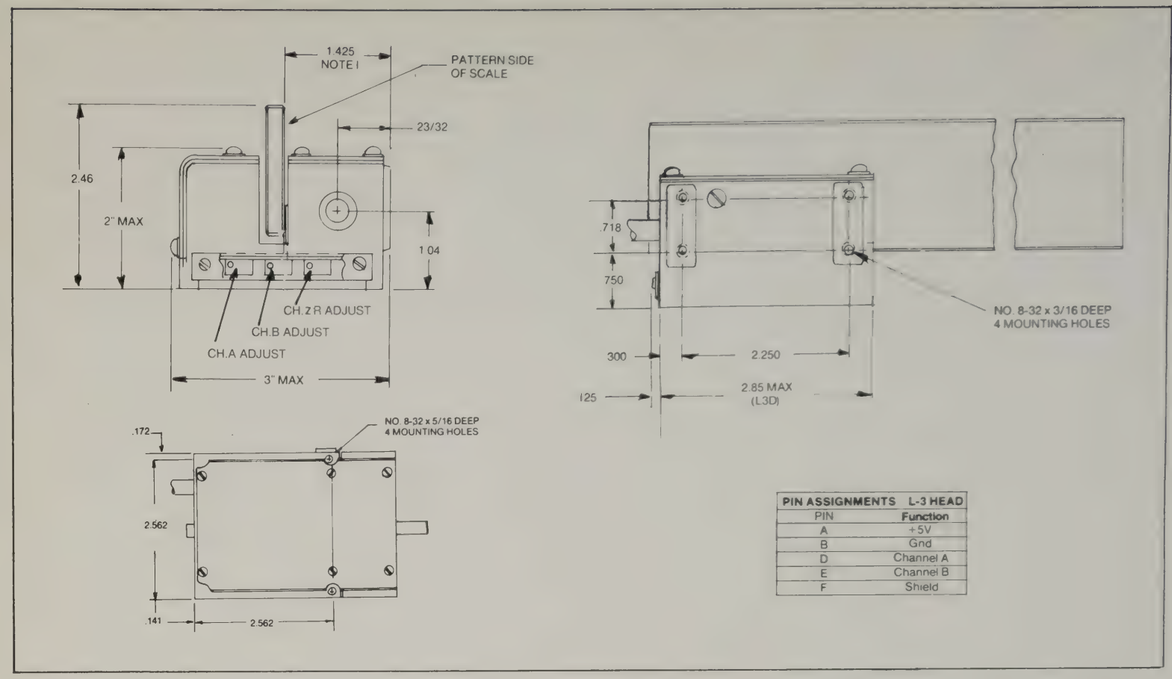

PIN ASSIGNMENTS	L-3 HEAD
PIN	Function
A	+5V
B	Gnd
D	Channel A
E	Channel B
F	Shield

L3 outline drawing

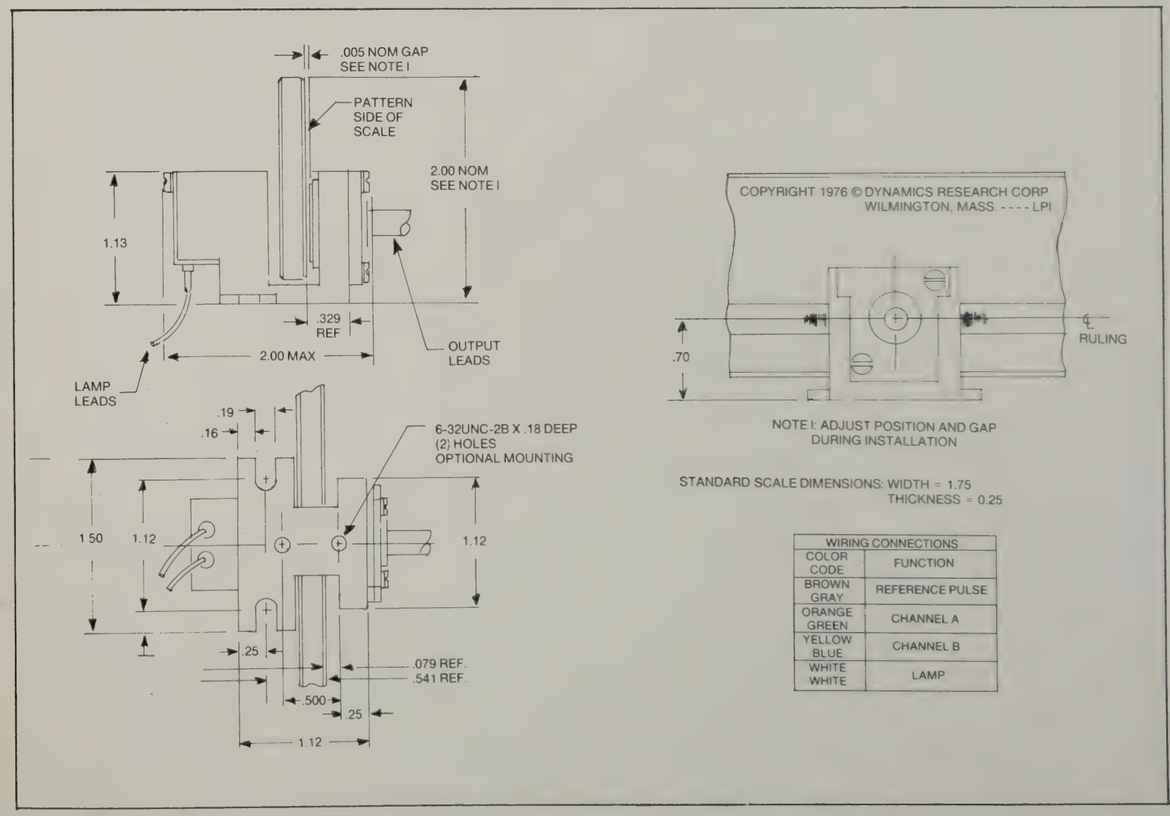

WIRING CONNECTIONS	
COLOR CODE	FUNCTION
BROWN GRAY	REFERENCE PULSE
ORANGE GREEN	CHANNEL A
YELLOW BLUE	CHANNEL B
WHITE WHITE	LAMP

L5A outline drawing

How to order

Model No.

LMS 50—1M

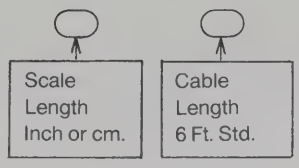

LMS 100—2M

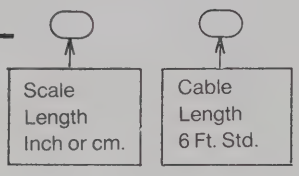

*Note: Add 2 inches to overall reading length requirement to accommodate encoder head sensing area.

LMS 500—10M

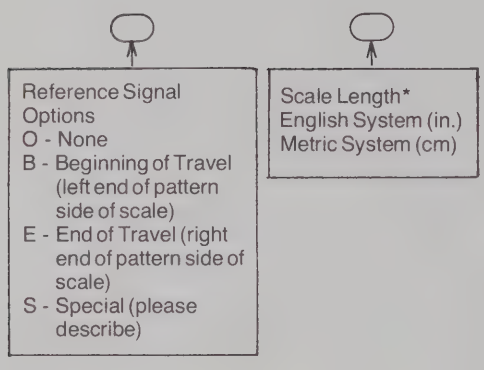

*Note: Add 1 inch to overall reading-length requirement to accommodate encoder head sensing area.

Specifications subject to change without notice

Warranty

DRC warrants its products against defects in material and workmanship under normal and proper use and service for a period of one year from date of shipment. DRC's obligation under this warranty is limited to, at DRC's election, furnishing without charge, F.O.B. Wilmington, Massachusetts, a replacement for any defective part or repairing such part.

This warranty does not apply to any product which has been operated at other than specified voltages or currents or which has been subjected to abuse or in which the encoder housing has been opened or where the product has otherwise been tampered with. The foregoing warranty is exclusive and in lieu of all other warranties of quality, whether written, oral or implied.

DRC® Dynamics Research Corporation

Precision Measurement Division
60 Concord Street, Wilmington, MA 01887
Telephone (617) 658-6100/TWX: (710) 347-0299

Models

LMT-500/025

Fully enclosed .0005" (.01mm) Linear Transducer

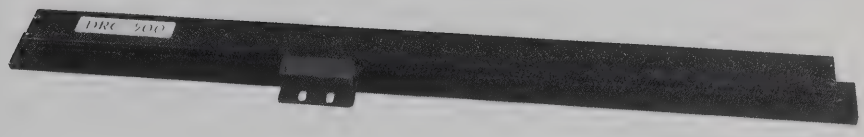

Models LMT-500 (.0005") and LMT-025 (.01mm) are high speed, solid state, fully enclosed optical/linear digital measuring transducers. They are designed to provide accurate and direct measurement of linear motion for machine tools under the most rugged plant conditions.

Compare the Difference

The LMT-500/025 transducer features:

Precision glass scale is permanently protected from damage. Transducers never need to be opened. Cover is O-ring sealed to housing at the factory. Glass scale is never exposed to contaminants or to the possibilities of mishandling or damage during mounting.

Light source—solid-state light emitting diodes guarantee long life and assure reliability.

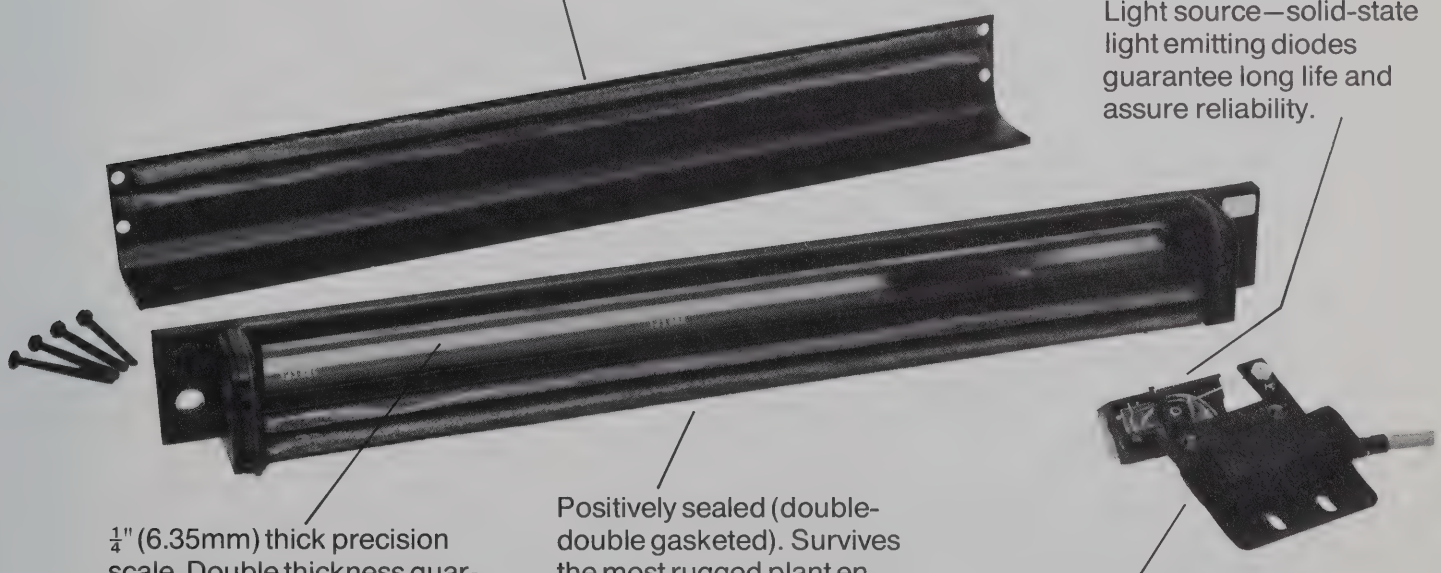

$\frac{1}{4}$" (6.35mm) thick precision scale. Double thickness guarantees against damage during rugged handling or mounting and assures top performance under rough machine shop conditions.

Positively sealed (double-double gasketed). Survives the most rugged plant environment . . . stops oil, dirt, dust and metal chips from entering.

Self guided reading heading permanently affixed in the transducer. No special brackets needed to prevent damage to the sealing head during shipping and mounting.

Technical Specifications

LMT-500/025 Enclosed Linear Encoder

Resolution	LMT-500 0.0005 inches. LMT-025 0.01mm.
Glass Scale	.0002 inches per foot (.016mm per/meter).
Accuracy	Linear coefficient of expansion 4.5μin/in/°F (8.1μm/m/°C), close match to gray cast iron.
Light Source	Long-life solid-state Light Emitting Diode.
Photo-Sensors	Solid-state photo-voltaic cells.
Output Signals	Sine and Cosine signals (one-cycle = .002" or .04mm). 80 millivolts into 2000 ohms.
Maximum Velocity	20 inches or 508mm per second.
Allowable Runout	Machine ways may deviate from straight-line motion by .005" in 48" or .13mm in 1220mm.

Mechanical Information for LMT-500 and LMT-025

For Transducers up to 49" (1245mm)

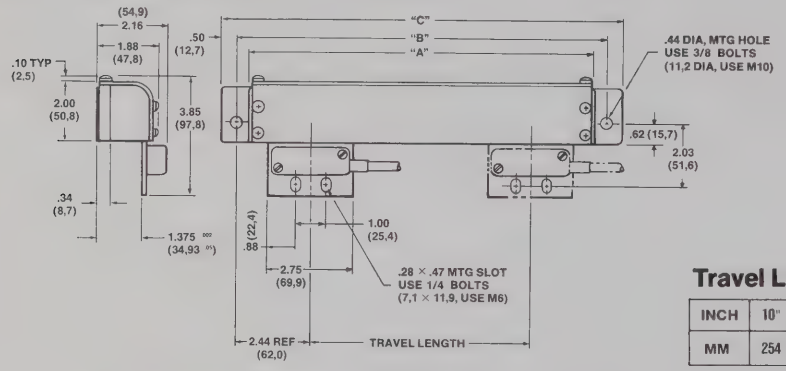

A = Travel Length + 3.87" (98.3mm)
B = Travel Length + 4.87" (123.7mm)
C = Travel Length + 5.87" (149.1mm)

Travel Length

INCH	10"	13"	16"	19"	21"	25"	31"	37"	43"	49"
MM	254	330	406	483	533	635	787	940	1092	1245

For Transducers 55" (1397mm) to 103" (2616mm)

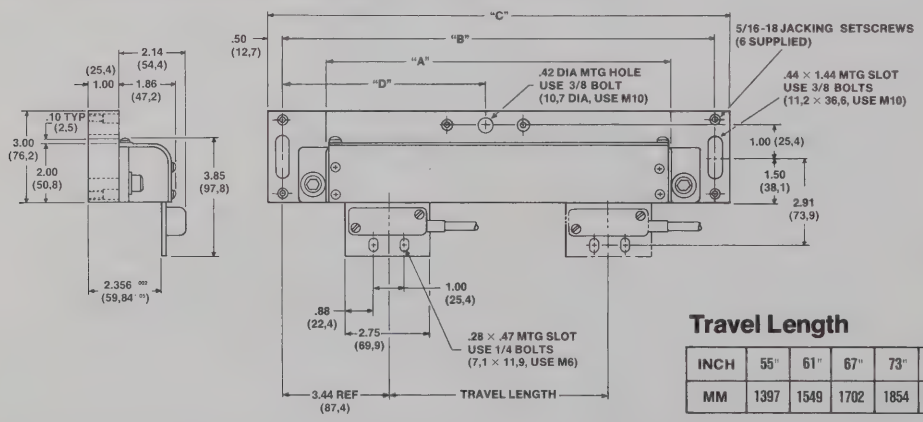

A = Travel Length + 3.87" (98.3mm)
B = Travel Length + 6.87" (174.5mm)
C = Travel Length + 7.87" (199.9mm)
D = [Travel Length + 7" (177.8mm)] ÷ 2

Minimum transducer travel required = machine travel from mechanical stop to mechanical stop + 1" (24.5mm).

Travel Length

INCH	55"	61"	67"	73"	79"	85"	91"	97"	103"
MM	1397	1549	1702	1854	2007	2159	2311	2464	2616

DRC, where quality is more than just a name.

Number One in digital transducers and readout systems.

Dynamics Research Corporation

Components Division
60 Concord Street, Wilmington, MA 01887
Telephone (617) 658-6100/TWX: (710) 347-0299

© 1976 Dynamics Research Corporation

Model

DRC-SST

Fully Enclosed Linear Transducer

Bulletin No. 06-100

- TTL Level Outputs
- Accuracy better than 100μ in.
- Impervious to contaminants

- True Linear Measurement
- Can be used for measurement or control
- Available in either 2 or 4 inch stroke

The Model SST enclosed linear transducer was designed for use in production environments. It is useful as a feedback element or as a primary measurement tool. TTL level outputs at 100μ in. resolution provide immunity to ambient noise.

TECHNICAL SPECIFICATIONS

OUTPUTS	2 SQUARE WAVE SIGNALS PHASED 90 ± 22.5°
TTL OUTPUT LEVELS	LOGIC "0" 0.4 VDC MAX
	LOGIC "1" 2.8 VDC MIN
EXCITATION	5 VDC ± 5%, 150 MA
SYSTEM ACCURACY	± 100 MICRO-INCHES (2.5 MICRONS) ± 1 BIT DIGITIZING ERROR
MAXIMUM VELOCITY	20 INCHES/SEC
MAXIMUM ACCELERATION	100 INCHES/(SEC)^2
OPERATING FORCE	MINIMUM RETURN FORCE (SHAFT UP) .2 LBS
	MAXIMUM RETURN FORCE (SHAFT DOWN)1.8LBS
SEAL SYSTEM	SPLASHPROOF
SHAFT ATTACHMENT	OPTIONAL FLEXURE COUPLING (NO SPRING RETURN)

MECHANICAL INFORMATION FOR SST

CONNECTOR OUTPUT*	
PIN	FUNCTION
A	A
K	$\bar{A}$
B	B
E	$\bar{B}$
C	ZR
J	$\overline{ZR}$
H	+5V
D	GND
F	SHIELD

*MATING CONN. SUPPLIED

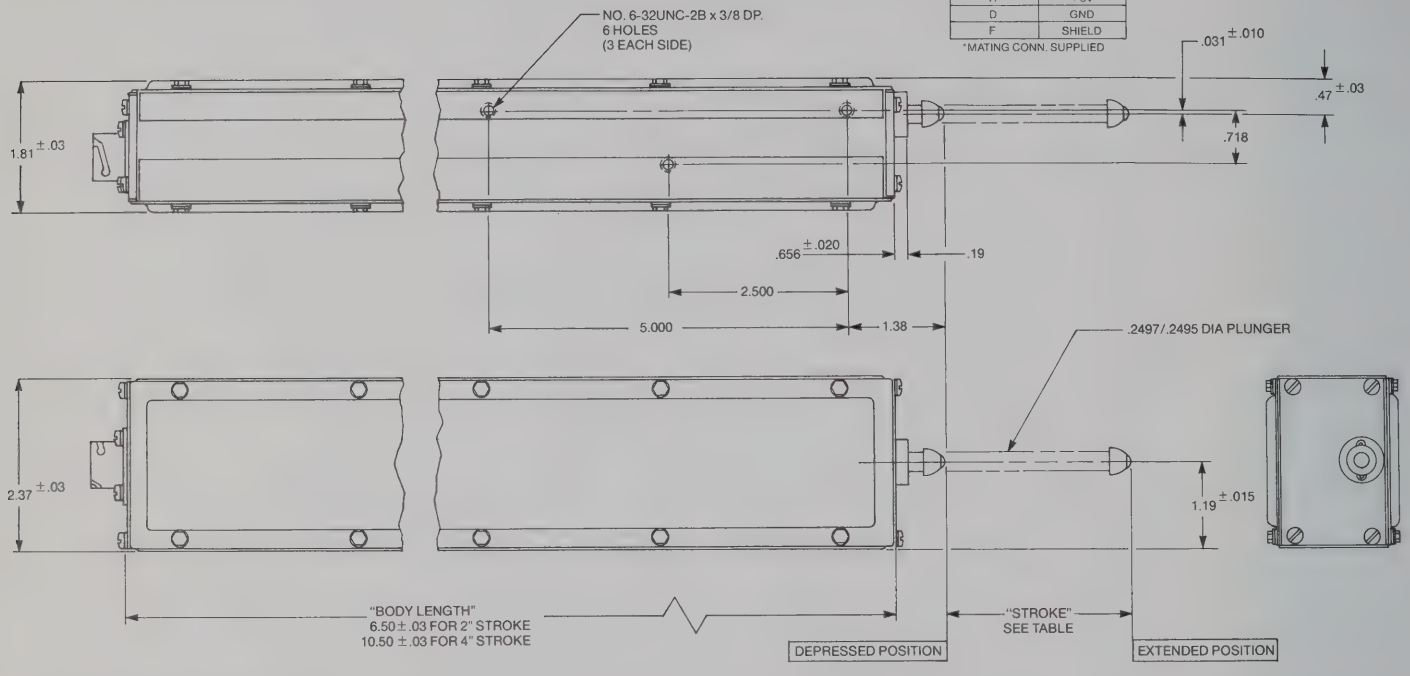

HOW TO ORDER

Model No. **SST**

- RESOLUTION
  - E—100 MICROINCH
  - M—2 MICRON
- STROKE
  - 2—2 INCH
  - 4—4 INCH
- POSITION OF ZR
  - 0—ZR AT EXTENDED POSITION
  - 1—ZR 1" FROM EXTENDED POSITION
  - 2—ZR 2" FROM EXTENDED POSITION
  - 3—ZR 3" FROM EXTENDED POSITION
  - 4—ZR 4" FROM EXTENDED POSITION
  - 9—NO ZERO REFERENCE
- MODIFIER

Dynamics Research Corporation

Precision Measurement Division
60 Concord Street, Wilmington, MA 01887
Telephone (617) 658-6100/TWX: (710) 347-0299

WARRANTY

DRC warrants its products against defects in material and workmanship under normal and proper use and service for a period of one year from date of shipment. DRC's obligation under this warranty is limited to, at DRC's election, furnishing without charge, F.O.B. Wilmington, Massachusetts, a replacement for any defective part or repairing such part.

This warranty does not apply to any product which has been operated at other than specified voltages or currents or which has been subjected to abuse or in which the encoder housing has been opened or where the product has otherwise been tampered with. The foregoing warranty is exclusive and in lieu of all other warranties of quality, whether written, oral or implied.

Models

DRC 100/500

Digital Readouts

Dynamics Research Corporation offers a family of digital readout systems for true measurement of position.

Each DRC/DRO features a rugged, easy-to-read, easy-to-use, all solid-state, fully enclosed unit for the toughest machine tool environments.

Technical Specifications

DRC 100/500 Digital Readout

Display

6 Digits with overflow plus sign
5/8" 7-segment long-life LED Numeric Indicators

	DRC 500/500M	*DRC 100*
Resolution:	0.0005"	0.0001"
	0.01mm	0.002mm
Range:	± 199.9995"	± 199.9999"
	± 19999.99mm	± 1999.998mm

Inputs

Quadrature square waves, TTL level. OR, Sine and Cosine Transducer Output Signals, 40 millivolts.
Input Impedence: 3600 ohms, 1000 picofarads.
Noise Immunity: Filtered and shielded against ambient electrical shop noise.

Travel Speed

To 20 ips or 500 mmps with DRC 500 (0-10Khz).
To 10 ips or 250 mmps with DRC 500M (0-5Khz).

Capacity

One, Two or Three Axes.

Reset

Each axis, independently, to all zeros'. (Remote, optional).

DRC 500M (With memory)

Datum and step modes measures absolute distance from a preset coordinate and incremental step from one position to the next.

Preset (Optional)

Each axis preset independently to any number by front panel rotary digit switches. (Remote, optional).

Data Output (Optional)

BCD 8,4,2,1 serial by character, addressable externally, TTL levels. Output connector DBM-25PA.

Inch-Metric (Optional)

Front panel switch converts system operation to metric units to nearest 0.01mm, using the LMT 500 and to the nearest 0.002mm using the LMT 100.

Radius/Diameter (Optional)

Switches X-Axis to read diameter or radius dimension for use on the cross slide of a lathe.

Power

115 VAC ± 10% 50-60 Hz, 0.3 amperes.

Power (Optional)

115/230 VAC ± 10%, switchable thru rear panel.

Power Output

+ 5 Volts 230 milliamperes per axis.

Temperature

50° F to 110° F operating ambient (10° C to 45° C).

DRC 100/500 Digital Readout

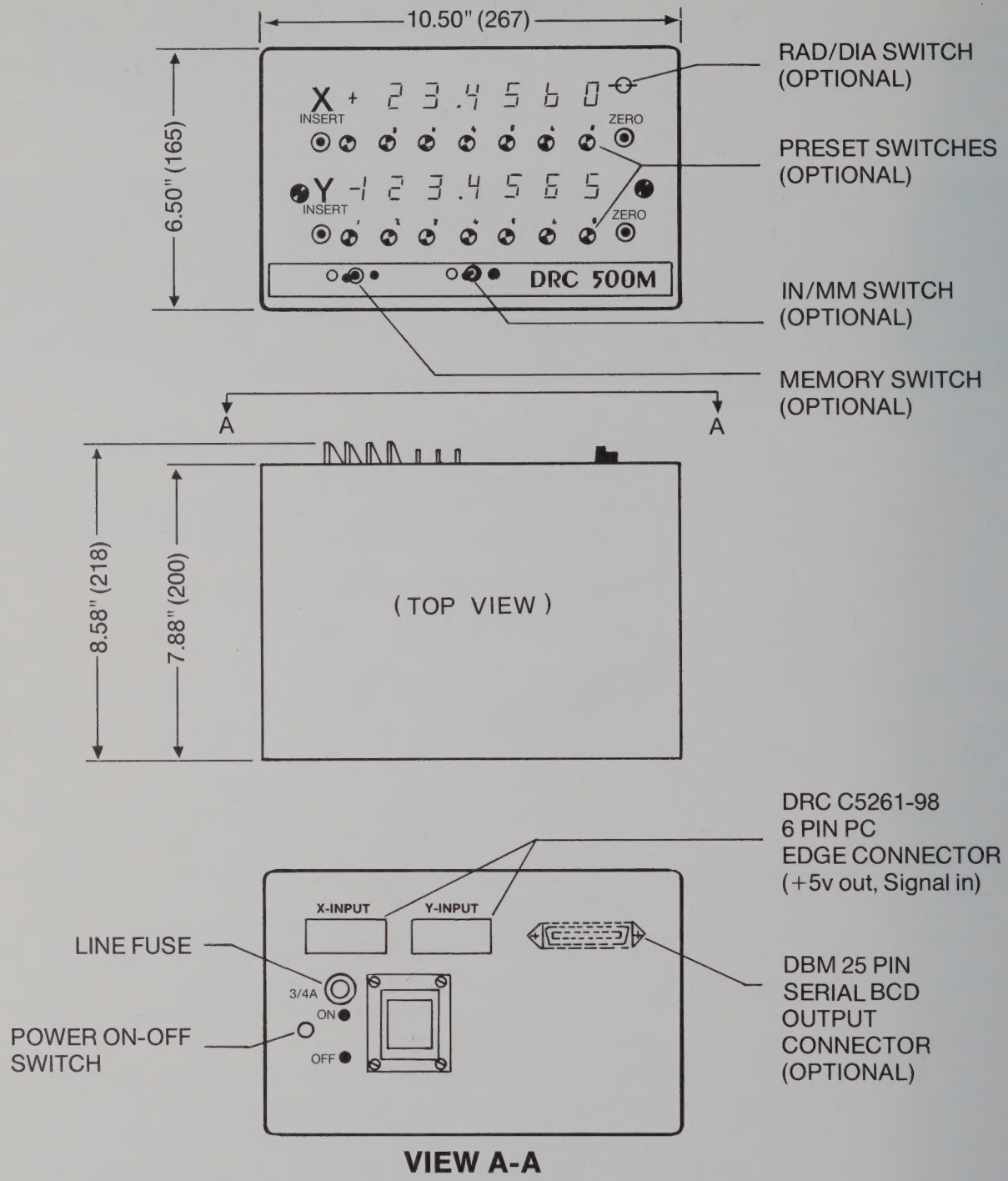

VIEW A-A

DRC, where quality is more than just a name.

Number One in digital transducers and readout systems.

Dynamics Research Corporation

Components Division
60 Concord Street, Wilmington, MA 01887
Telephone (617) 658-6100/TWX: (710) 347-0299

© 1976 Dynamics Research Corporation
Patents Pending